Purchase Guide

Ophthalmic Lenses, Blanks & Micro Fiber Cleaning Cloth

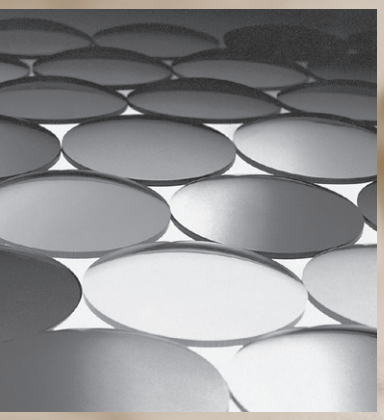




2027

YSTJ Co.

Y & S (Beijing) Opto-Electro Industries Ltd.

Y & S (Tianjin) Industries Ltd.

PG270101

Contents

About us 1

Ophthalmic Lenses

General Conditions 3
CR-39 Hard Resin Lenses 6
1.56 Middle Index Hard Resin Lenses 15
1.56/1.6 Photochromic Hard Resin Lenses 25
1.59 Polycarbonate Lenses 31
1.60/1.67 Hi-index Hard Resin Lenses 35
Mineral White 1.523 Ophthalmic Lenses 42
Mineral 1.7/1.8/1.9 Hi-index Lenses 47
Mineral Photochromic Lenses 52
Sunlens & Polarized Lenses 57
Appendix 1 Coatings 60
Appendix 2 Quality Control of Lenses 61
Appendix 3 Package of Lenses 62

Ophthalmic Lens Blanks

General Conditions 64
1.523 Optical White (Crown) Lens Blanks 66
Flint Button for Bifocal Lenses 67
Sunlens Blanks 67
1.7 Hi-index Lens Blanks (White, Pink & Brown) 68
1.8 Hi-index Lens Blanks (White & Pink) 69
1.9 Hi-index Lens Blanks 69
Photochromic Grey Lens Blanks 70
Photochromic Brown Lens Blanks 71
Mold Glass 72

Micro Fiber Cleaning Cloth 76

Editor	Yang Shu
Assistant Editor	Li Jia, Wang Xin, Andy Ziyi Yang Xu Tao, Chen Rong, Yang Ling, Zhu Pengyu
Coordinator	Multi Solutions Ltd.
Interpreter	Andy Ziyi Yang, Felipe Zengxin Li
Layout Artist	Li Jia
Website Designer	Wan Vi Tech

All rights reserved.
Copyright © 2026 by YSTJ Co.
No part of this brochure may be reproduced or transmitted in any form or by any means, electronic or mechanical, including photocopying, recording, or by any information storage and retrieval system, without permission in writing from YSTJ Co.

Y & S Optical Division
Room 1803, Triumph Center, 170 Bei Yuan Lu,
Beijing, 100101 China
Tel: +86 10 84852211 Fax: +86 10 84852233
E-mail: info@ystj.com www.ystj.com

About us

Being a member of the China Optometric & Optical Association (COOA), Y&S is one of the leading manufacturers and exporters in China, supplying a full range of Ophthalmic Lenses and Blanks. The company is ISO9001 (2015), ISO14001 (2015), and OHSAS18001 (2007) standard certified, relevant products have been approved by TUV according to CE standards and also registered with the government in many countries. Besides CR-39 Hard Resin Lenses, 1.56 Middle Index Hard Resin Lenses, 1.59 Polycarbonate Lenses, 1.60 / 1.67 Hi-index Hard Resin Lenses, Y&S also provides Mineral White 1.523 Optical (Crown) Lenses, Mineral 1.7 / 1.8 / 1.9 Hi-index Lenses, Photochromic Lenses, and Sunlens. With more than 20 years of experience in this field, Y&S has a high reputation with various products being proved to be very competitive and successful in overseas markets.

COOA *A member of China Optometric & Optical Association*

UKAS MANAGEMENT SYSTEMS 0277 *ISO9001 Certified*



QUALITY MANAGEMENT SYSTEM
CERTIFICATION CERTIFICATE

YSTJ Co.
The Quality Management System Conforms to the Standard
ISO9001:2015

Unified Social Credit Code: 92110105MA01712361W
Registration No.: UQ243030280
First Issuing Date: 29 Oct. 2024
Issuing Date: 29 Oct. 2024
Expiration Date: 28 Oct. 2027

ISO9001 Certificate



质量管理体系认证证书

北京永顺泰嘉科技有限公司
质量管理体系符合ISO9001:2015标准

注册地址：北京市朝阳区北苑路170号3号楼15层1单元1803
经营地址：北京市朝阳区北苑路170号3号楼15层1单元1803
认证范围：眼镜片、毛坯和眼镜架的销售

统一社会信用代码：92110105MA01712361W
证书编号：UQ243030280
初次获证日期：2024年10月29日
发证日期：2024年10月29日
有效期至：2027年10月28日

ISO9001 Certificate



中华人民共和国北京海关
A类企业证书

企业名称：北京耀森光电设备有限公司
海关注册编码：1105960150

你单位提出的A类管理类别申请，我关已予以受理。经审核，我关认为你单位符合《中华人民共和国海关企业分类管理办法》第七条规定的条件，决定对你单位适用A类管理。

2024年10月09日

A-class Certificate China Customs



Certificate of Registration

Certificate number：23218E202217R0S

Proof of

Y&S(BEIJING)OPTO-ELECTRO INDUSTRIES LTD

Unified Social Credit Code: 91110107481335598Z

Registered address: Room 1803 15/F Building c North Outujingdian 170 Beiyuan Lu Chaoyang District Beijing China Zip code：100101

Business address: Room 1803 15/F Building c North Outujingdian 170 Beiyuan Lu Chaoyang District Beijing China Zip code：100101

Conform to the environmental management system

GB/T24001-2016/ISO14001:2015 Standard requirements

Authentication range

Related environmental management activities of the places involved in the sales and service of oil mist lubrication systems, spectacles lenses, teaching instruments, meters, valves and bags.

Issuing date:May 10,2018
Validity period: May 09,2021

Beijing first honesty united certificate Co.,Ltd

ISO14001 Certificate



Certificate of Registration

Certificate number：23218S200191R0S

Proof of

Y&S(BEIJING)OPTO-ELECTRO INDUSTRIES LTD

Unified Social Credit Code: 91110107481335598Z

Registered address: Room 1803 15/F Building c North Outujingdian 170 Beiyuan Lu Chaoyang District Beijing China Zip code：100101

Business address: Room 1803 15/F Building c North Outujingdian 170 Beiyuan Lu Chaoyang District Beijing China Zip code：100101

Comply with occupational health and safety management system

GB/T28001-2011/OHSAS 18001:2007 Standard requirements

Authentication range

Related occupational health and safety management activities of the places involved in the sales and service of oil mist lubrication systems, spectacles lenses, teaching instruments, meters, valves and bags.

Issuing date:May 10,2018
Validity period: May 09,2021

Beijing first honesty united certificate Co.,Ltd

OHSAS18001 Certificate



CE Technical Documentation Review Report

TUVRheinland

Applicant: YSTJ Co. Address: Room 1803, Triumph Center, 170, Bei Yuan Lu, Beijing 100101, China

Report Number: 15019632 003

Examination intent: Examination the completeness of the Technical Documentation according to the requirements of the Medical Devices Directive 93/42/EEC Annex VII

Product(s): Spectacle Lenses

Type(s)/Model(s): Hard Resin Lenses, Mineral Lenses, Blanks

Classification: Class I, rule 1 (according to manufacturer's declaration)

Examination period: 2024-02-08

Date of expiry: 2025-02-07

Review result: During the examination of the provided Technical Documentation (No. Y&S/CE-001, Revision A/0, Dated: 2024-02-02, Modification: 2024-02-08), no Non-compliance according to the requirements of the Medical Devices Directive 93/42/EEC Annex VII was detected.

TÜV Rheinland (Shanghai) Co., Ltd.

TUV Certificate



营业执照

统一社会信用代码
92110105MA01712361W

（副本）(1-1)

名　　称　北京永顺泰嘉科技有限公司
类　　型　有限责任公司(自然人独资)
法定代表人　徐涛
经营范围　销售机械设备、电气设备、眼镜、计算机、软件及辅助设备、化工产品（不含危险化学品）、针纺织品、服装、鞋帽、日用品、化妆品、文具用品、玉石饰品、金属材料、建筑材料、仪器仪表、模板图文设计、制作。医疗信息咨询（不含诊疗活动）。依办展览展示活动。经济贸易咨询。货物进出口、代理进出口、技术进出口。技术推广服务。（市场主体依法自主选择经营项目，开展经营活动；依法须经批准的项目，经相关部门批准后依批准的内容开展经营活动；不得从事国家和本市产业政策禁止和限制类项目的经营活动。）

注册资本　100万元
成立日期　2016年05月20日
营业期限　2018年11月30日 至 2048年11月29日
住　　所　北京市朝阳区北苑路170号3号楼15层1单元1803

登记机关　2021年11月30日

国家企业信用信息公示系统网址：http://www.gsxt.gov.cn

国家市场监督管理总局监制

Business License
YSTJ Co.



团体会员证书（正本）

中镜协证字第3457号

北京永顺泰嘉科技有限公司

经审核，批准你单位为本会会员。

有效期至 2025年12月31日

中国眼镜协会
2023年11月30日

Membership Certificate
China Optometric & Optical Association (COOA)

Ophthalmic Lenses

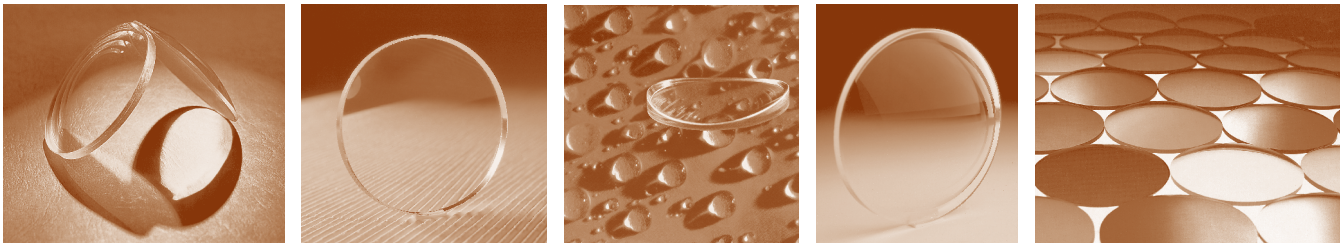

FDA CE TÜV AEO

ISO9001 ISO14001 OHSAS18001

General Conditions

(1) Both mineral (glass) and hard resin lenses conform to the following standards:

- ISO8980-1-2017 Ophthalmic optics - Uncut finished spectacle lenses - Part 1: Specifications for single-vision and multifocal lenses
- ISO8980-2-2017 Ophthalmic optics - Uncut finished spectacle lenses - Part 2: Specifications for progressive power lenses
- ISO8980-3-2022 Ophthalmic optics - Uncut finished spectacle lenses - Part 3: Transmittance specifications and test methods
- ISO8980-4-2026 Ophthalmic optics - Uncut finished spectacle lenses - Part 4: Specifications and test methods for the properties of anti-reflective coatings and hydrophobic coatings
- ISO8980-5-2005 Ophthalmic optics - Uncut finished spectacle lenses - Part 5: Minimum requirements for spectacle lens surfaces claimed to be abrasion-resistant
- ISO10322-2026 Ophthalmic optics - Semi-finished blanks
- ISO12311- 2023 Personal protective equipment Test methods for sunglasses and related eyewear
- ISO12312-1-2022 Eye and face protection - Sunglasses and related eyewear - Part 1 Sunglasses for general use
- ISO12312-2-2015 Eye and face protection - Sunglasses and related eyewear - Part 2 Filters for direct observation of the sun
- ISO12312-3-2022 Eye and face protection - Sunglasses and related eyewear - Part 3 Sunglasses for running, cycling and similar active lifestyles
- ISO13666-2019 Ophthalmic optics - Spectacle lenses - Vocabulary
- ISO14889-2025 Ophthalmic optics - Spectacle lenses - Fundamental requirements for uncut finished lenses
- ISO/TR28980-2007 Ophthalmic optics - Spectacle lenses - Parameters affecting lens power measurement
- GB/T10810.1-2025 Uncut finished spectacle lenses - Part 1: Single-vision and multifocal
- GB/T10810.2-2025 Uncut finished spectacle lenses - Part 2: Power-variation
- GB/T10810.3-2025 Uncut finished spectacle lenses - Part 3: Transmittance test methods
- GB/T10810.4-2025 Uncut finished spectacle lenses - Part 4: Anti-reflective coatings test methods
- GB/T10810.5-2025 Uncut finished spectacle lenses - Part 5: Abrasion-resistant of surfaces test methods
- GB27995-1-2011 Semi-finished spectacle lens blanks - Part 1: Specifications for single-vision and multifocal lens blanks
- GB27995-2-2011 Semi-finished spectacle lens blanks - Part 2: Specifications for progressive power lens blanks
- GB39552.1-2020 Sunglasses and sunglare filters - Part 1: General requirements
- GB/T39552.2-2020 Sunglasses and sunglare filters - Part 2: Test methods
- QB2682-2005 Properties and quality requirement for anti-reflection coating of spectacles lenses
- QB/T2702-2005 Test method of abrasion-resistance for coating of spectacles lenses

Hard resin lenses also conform to QB/T2506-2017 Optical resin lenses standard.

Y&S offers a 1-year limited warranty.



Patent Certificates

(2) The quality management system of Y&S is ISO9001 (2015) and GB/T19001-2016 certified. The environmental management system of Y&S is ISO14001 (2015) and GB/T24001-2016 certified. The occupational health and safety management system of Y&S is OHSAS18001 (2007) and GB/T28001-2011 certified.

(3) All hard resin lenses (plastic lenses) are manufactured and statistically tested in compliance with FDA impact regulation 21 CFR 801.410 - Use of impact-resistant lenses in eyeglasses and sunglasses. Impact resistant lenses are neither shatterproof nor unbreakable.

(4) Goods are approved by TUV according to CE standard (Medical Devices Directive 93/42/EEC Annex VII, TUV Report No. 15016632002). Part of the lens products have been registered as medical devices in many countries. Related Y&S companies have also been registered as suppliers of medical devices in many countries. For more information, please contact info@ystj.com.

(5) All prices of finished and semi-finished lenses offered in this Purchase Guide are in US Dollars per pair (2 pieces). Discounts are applicable for large quantity orders.

(6) Prices of finished lenses in this Purchase Guide are based on certain power groups, details are as follows.

- Group G2 means Sph. power from 0.00 to ±2.00; -G2 means Sph. power from 0.00 to -2.00
- Group G4 means Sph. power from ±2.25 to ±4.00; -G4 means Sph. power from -2.25 to -4.00
- Group G6 means Sph. power from ±4.25 to ±6.00; -G6 means Sph. power from -4.25 to -6.00
- Group G2.2 means Sph. power from 0.00 to ±2.00 and Cyl. power from ±0.25 to ±2.00
- Group G4.2 means Sph. power from ±2.25 to ±4.00 and Cyl. power from ±0.25 to ±2.00
- Group G6.2 means Sph. power from ±4.25 to ±6.00 and Cyl. power from ±0.25 to ±2.00
- Group G2.4 means Sph. power from 0.00 to ±2.00 and Cyl. power from ±2.25 to ±4.00
- Group G4.4 means Sph. power from ±2.25 to ±4.00 and Cyl. power from ±2.25 to ±4.00
- Group G6.4 means Sph. power from ±4.25 to ±6.00 and Cyl. power from ±2.25 to ±4.00

(7) Usually, the minimum quantity of each shipment of ophthalmic lenses is 1,000 pairs (2,000 pieces). For quantity between 1,000 and 5,000 pairs, all prices are on FCA/FOB Shanghai, China basis, Y&S will either deliver goods on FCA/FOB basis or charge freight and insurance fees respectively. If the quantity of each shipment is less than 1,000 pairs (2,000 pieces), Y&S will charge USD100.00 extra fee under each shipment and either deliver goods on FCA/FOB basis or charge freight and insurance fees respectively.

(8) If the total quantity of each shipment is more than 5,000 pairs (10,000 pieces), all prices can be as on CFR (C&F) Overseas Main Port basis by sea. To have goods shipped by air, Y&S will either deliver goods on FCA Shanghai, China basis or on CPT, CIF, CIP basis, provided Y&S will charge air freight and insurance fees respectively.

(9) If a transaction is made on CIF or CIP basis, insurance will be arranged by Y&S for 110% of invoice value covering all risks, provided no other requirements from the customer.

(10) The customer is suggested to accept adjustments on the quantity of each power/specification to fit for full box packing or full carton packing, it will be convenient for both Y&S and its customers to handle consignments and inventory.

(11) To deliver each order quickly, a maximum shortage of 5% on quantity or transaction value is allowed without prior notice. Y&S will provide a detailed list of the shortage to the customer after shipment. Y&S will either adjust relevant quantity and value in shipping documents in the current order or adjust with the customer in future orders.

(12) Lenses can be packed in Y&S's general lens covers without showing Y&S's information which is shown in this Purchase Guide free of charge. Provided any shipment with more than 5,000 pairs (10,000 pieces), Y&S can also pack lenses with one lens cover design appointed by the customer free of charge; otherwise, Y&S will charge an extra fee of USD100.00 for each design. For more details about packing, please refer to Appendix 3 – Package of Lenses.

(13) Y&S guarantees the nominal base curve and the center thickness of semi-finished lenses. Y&S has the right to adjust the backside curve (concave), but it's guaranteed that the actual center thickness won't be lower than the nominal center thickness indicated in this Purchase Guide.

(14) Pre-shipment inspections by China Entry-Exit Inspection and Quarantine Bureau (CIQ), SGS, BIVAC, Intertek, COTECNA, and others will be handled by Y&S, provided inspection applied and inspection fee paid by the customer when confirming orders.

(15) Mineral ophthalmic lenses (spectacle lenses of glass) are cleared by Chinese customs under H.S. Code 9001.40; plastic lenses (spectacle lenses of plastic) are cleared by Chinese customs under H.S. Code 9001.50; if necessary, the H.S. Code of the importing country can be shown in shipping documents according to the customer's requirement.

(16) The following payment terms are accepted by Y&S:

- L/C: By irrevocable L/C at sight, provided the covering L/C being received by Y&S on time and remaining valid for negotiation in China until the 21st day after shipment. L/C should be in English and show the full contact information of Y&S.
- T/T: 30% of the total transaction value to be paid by T/T while confirming the order; balance payment to be paid by T/T before shipment.

(17) Ophthalmic lenses need to be stored in a cool, dry, ventilated condition and they must avoid direct sunlight.

(18) Y&S is entitled to charge a storage fee, re-cleaning fee, re-drying fee, and other relevant fees if the customer doesn't pick up goods within 30 days after the goods are ready.

(19) Goods are of China origin. Commercial Invoices, Packing Lists, Packing Details Lists, and Bill of Lading or Air Waybill will be provided by Y&S under each shipment. An Insurance Policy or Insurance Certificate will also be submitted when the transaction is made on CIF or CIP basis. One of the following Certificate of Origin can be submitted upon the customer's request:

- Certificate of Origin approved by CCPIT - China Council for the Promotion of International Trade (China Chamber of International Commerce)
- Certificate of Origin (Asia-Pacific Trade Agreement) approved by CCPIT - China Council for the Promotion of International Trade (China Chamber of International Commerce)
- Certificate of Origin (Form for China-Peru FTA) approved by CCPIT - China Council for the Promotion of International Trade (China Chamber of International Commerce)
- Certificate of Origin (GSP Form-A) approved by China Entry-Exit Inspection and Quarantine Bureau (CIQ)
- Certificate of Origin (Form F for China-Chile FTA) approved by China Entry-Exit Inspection and Quarantine Bureau (CIQ)

If any other documents are required, the customer needs to inform Y&S when confirming the order. Provided no other notice, all documents will be issued in the name of the customer's company.

(20) Y&S keeps the right to adjust prices, technical data, and conditions without prior notice. Adjusted prices, technical data, and conditions can be downloaded from Y&S's website www.ystj.com.

FDA CE TÜV AEO

ISO9001 ISO14001 OHSAS18001

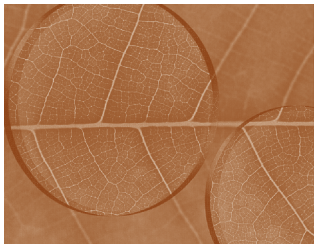




CR-39 Hard Resin Lenses



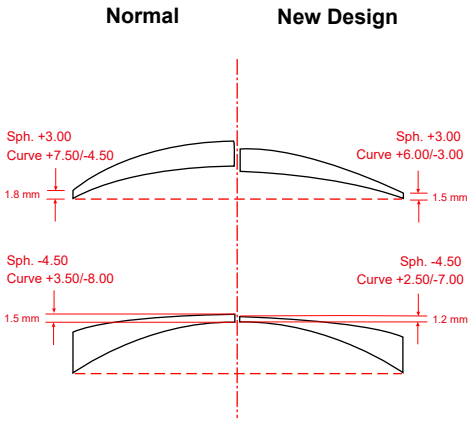

- Refraction index N_d=1.5.
- Abbe value 59.
- Density 1.31 g/cm^3.
- High scratch resistance.
- Newly designed products, slim and thin.
- High scratch resistance, super-hard protection coating is available (tintable and non-tintable).
- HMC+EMI coating is available in greenish and bluish colors. Super Hydrophobic is also available.
- Absorbing UV-ray and providing effective protection for the eyes.
- Tintable to various fashionable colors.

Slim 150 Plus - Dia60mm



Price List

USD/Pair

	Sph.		Sph./Cyl.		
	+G2, +G4 & +G6	+G8[4] & +G10[4]	+G2.2, +G4.2 & +G6.2	+G8.2[4]	+G2.4, +G4.4 & +G6.4
Un-coated	0.850	1.500	0.850	1.750	1.750
HC Non-Tnt.[1]	1.030	1.700	1.030	1.920	1.950
HC Tintable[2]	1.650	2.400	1.650	2.550	2.650
HMC+EMI[3]	1.650	2.400	1.650	2.550	2.650

Remark 1 HC Non-Tnt. means Non-tintable Hard-coated, pencil hardness up to 7H.

Remark 2 HC Tintable means Color Tintable Hard-coated, pencil hardness up to 6H, min. quantity of each shipment is 5,000 pairs.

Remark 3 HMC+EMI including Hard + AR Multi-coating + Hydrophobic and Electro Magnetic Interference Blocking.
Super Hydrophobic is available with a surcharge of USD0.30/pair and min. quantity of each shipment is 3,000 pairs.

Remark 4 0.50 per step instead of 0.25.

Available Power Range

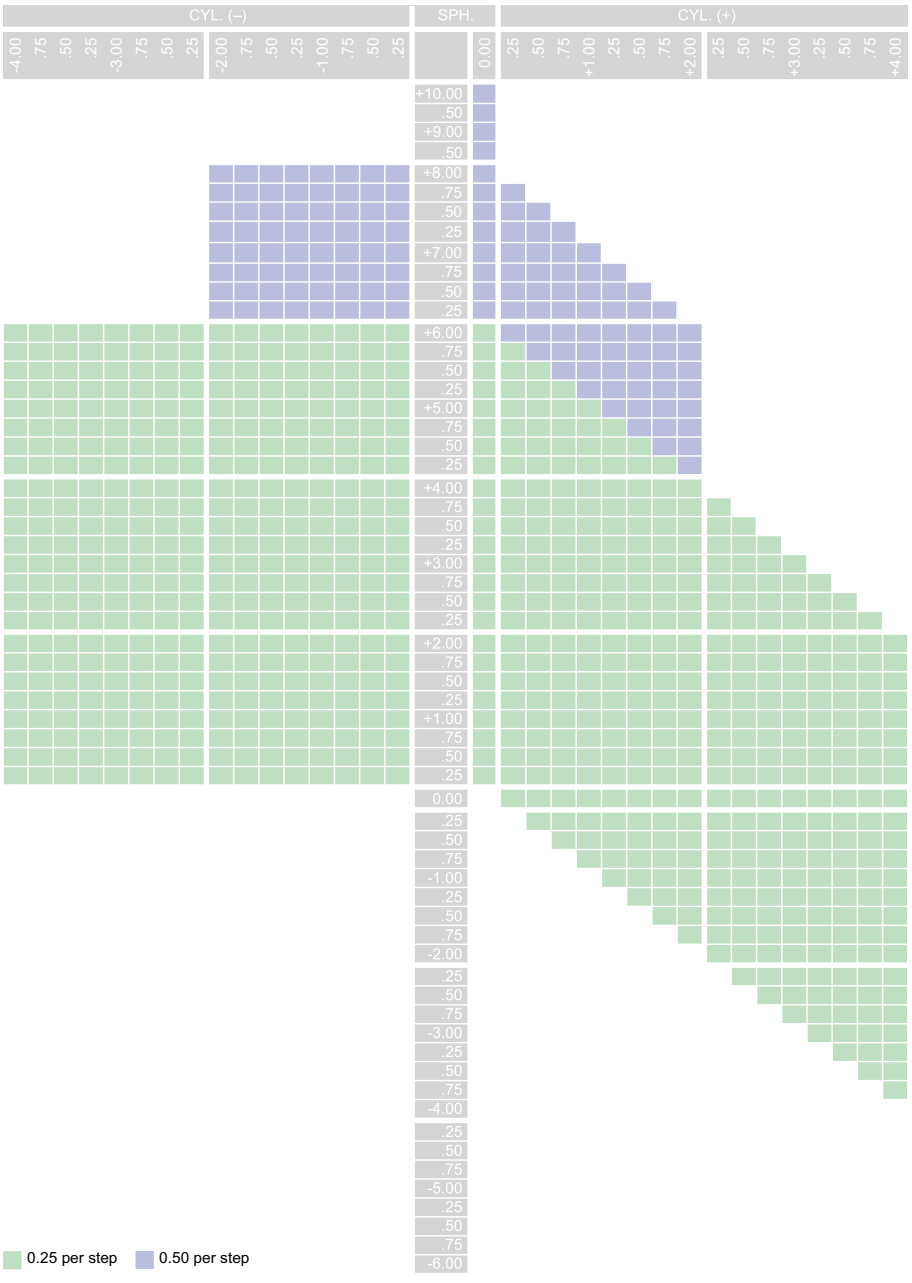

Curve & Thickness

Sph.	Curve		E. Thick. (mm)
	CVX (+)	CCV(-)	
.25	4.25	4.00	1.8
.50	4.50	4.00	1.8
.75	4.75	4.00	1.8
+1.00	5.00	4.00	1.8
.25	5.25	4.00	1.5
.50	5.50	4.00	1.5
.75	5.75	4.00	1.5
+2.00	6.00	4.00	1.5
.25	5.25	3.00	1.5
.50	5.50	3.00	1.5
.75	5.75	3.00	1.5
+3.00	6.00	3.00	1.5
.25	6.25	3.00	1.5
.50	6.50	3.00	1.5
.75	6.75	3.00	1.5
+4.00	7.00	3.00	1.5
.25	6.25	2.00	1.2
.50	6.50	2.00	1.2
.75	6.75	2.00	1.2
+5.00	7.00	2.00	1.2
.25	7.25	2.00	1.2
.50	7.50	2.00	1.2
.75	7.75	2.00	1.2
+6.00	8.00	2.00	1.2

Regular 150 - Dia65mm

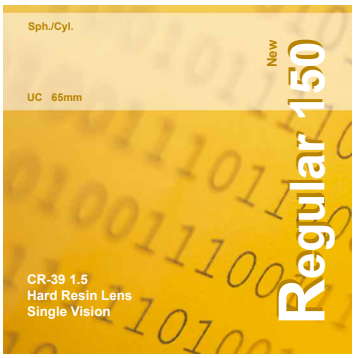

Price List

USD/Pair

	Sph.		Sph./Cyl.	
	±G2, ±G4 & ±G6	-G8[4] & -G10[4]	±G2.2, ±G4.2 & ±G6.2	±G2.4, ±G4.4 & ±G6.4
Un-coated	0.650	1.100	0.650	1.100
HC Non-Tnt.[1]	0.830	1.300	0.830	1.300
HC Tintable[2]	1.450	2.000	1.450	2.000
HMC+EMI[3]	1.450	2.000	1.450	2.000

Remark 1 HC Non-Tnt. means Non-tintable Hard-coated, pencil hardness up to 7H.

Remark 2 HC Tintable means Color Tintable Hard-coated, pencil hardness up to 6H, min. quantity of each shipment is 5,000 pairs.

Remark 3 HMC+EMI including Hard + AR Multi-coating + Hydrophobic and Electro Magnetic Interference Blocking.

Super Hydrophobic is available with a surcharge of USD0.30/pair and min. quantity of each shipment is 3,000 pairs.

Remark 4 0.50 per step instead of 0.25.

Curve & Thickness

Sph.	Curve		C. Thick. (mm)
	CVX (+)	CCV (-)	
0.00	5.00	5.00	2.0
.25	4.75	5.00	2.0
.50	4.50	5.00	2.0
.75	4.25	5.00	2.0
-1.00	4.00	5.00	2.0
.25	3.75	5.00	1.5
.50	3.50	5.00	1.5
.75	3.25	5.00	1.5
-2.00	3.00	5.00	1.5
.25	2.75	5.00	1.5
.50	2.50	5.00	1.5
.75	2.25	5.00	1.5
-3.00	2.00	5.00	1.5
.25	2.50	5.75	1.5
.50	2.25	5.75	1.5
.75	2.00	5.75	1.5
-4.00	1.75	5.75	1.5
.25	2.75	7.00	1.2
.50	2.50	7.00	1.2
.75	2.25	7.00	1.2
-5.00	2.00	7.00	1.2
.25	1.75	7.00	1.2
.50	1.50	7.00	1.2
.75	1.25	7.00	1.2
-6.00	1.00	7.00	1.2

Sph.	Curve		E. Thick. (mm)
	CVX (+)	CCV (-)	
.25	4.25	4.00	1.8
.50	4.50	4.00	1.8
.75	4.75	4.00	1.8
+1.00	5.00	4.00	1.8
.25	5.25	4.00	1.5
.50	5.50	4.00	1.5
.75	5.75	4.00	1.5
+2.00	6.00	4.00	1.5
.25	5.25	3.00	1.5
.50	5.50	3.00	1.5
.75	5.75	3.00	1.5
+3.00	6.00	3.00	1.5
.25	6.25	3.00	1.5
.50	6.50	3.00	1.5
.75	6.75	3.00	1.5
+4.00	7.00	3.00	1.5
.25	6.25	2.00	1.2
.50	6.50	2.00	1.2
.75	6.75	2.00	1.2
+5.00	7.00	2.00	1.2
.25	7.25	2.00	1.2
.50	7.50	2.00	1.2
.75	7.75	2.00	1.2
+6.00	8.00	2.00	1.2

Available Power Range

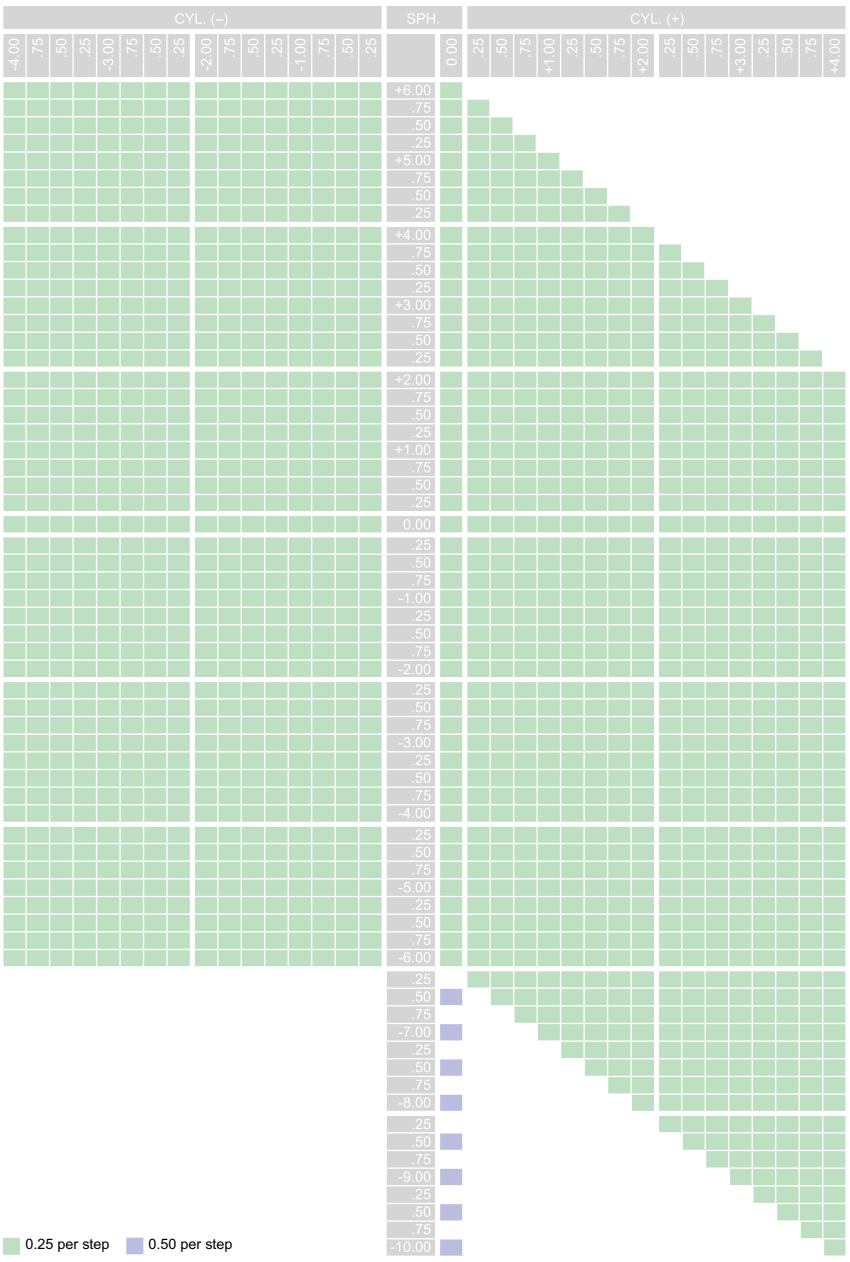

Lenticular 150 - Dia65mm



Price List

USD/Pair

	Sph.	
	+G8[4] & +G10[4]	+G12[4], +G14[4], +G16[5], +G18[5] & +G20[5]
Un-coated	2.000	2.250
HC Non-Tnt.[1]	2.200	2.450
HC Tintable[2]	2.800	3.050
HMC+EMI[3]	2.800	3.050

	Sph./Cyl.			
	+G8.2[4] & +G10.2[4]	+G12.2[4], +G14.2[4] & +G16.2[5]	+G8.4[4] & +G10.4[4]	+G12.4[4], +G14.4[4] & +G16.4[5]
Un-coated	5.000	5.250	5.500	5.500
HC Non-Tnt.[1]	5.200	5.450	5.700	5.700
HC Tintable[2]	5.800	6.050	6.300	6.300
HMC+EMI[3]	5.800	6.050	6.300	6.300

Remark 1 HC Non-Tnt. means Non-tintable Hard-coated, pencil hardness up to 7H.

Remark 2 HC Tintable means Color Tintable Hard-coated, pencil hardness up to 6H, min. quantity of each shipment is 5,000 pairs.

Remark 3 HMC+EMI including Hard + AR Multi-coating + Hydrophobic and Electro Magnetic Interference Blocking. Super Hydrophobic is available with a surcharge of USD0.30/pair and min. quantity of each shipment is 3,000 pairs.

Remark 4 0.50 per step instead of 0.25.

Remark 5 1.00 per step instead of 0.25 and 0.50.

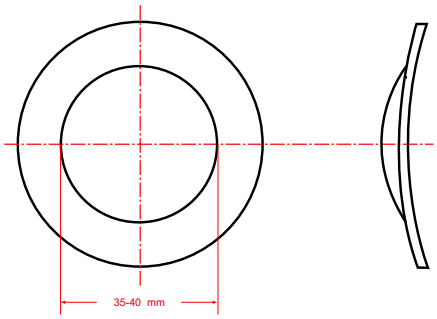

- The tolerance on usable size does not apply for lenses with a carrier curve such as lenticulars.

Semi-finished Lens

USD/Pair

Dia. (mm)	Curve		E. Thick. (mm)	Curve Radius (mm)		Price
	CVX(+)	CCV(-)		CVX(+)	CCV(-)	
65	7.00	2.50	6.0	75	209	3.750
65	8.00	2.50	6.0	65	209	3.750
65	9.00	2.50	6.0	58	209	3.750
65	10.00	2.50	6.0	52	209	3.750
65	11.00	2.50	6.0	48	209	4.500
65	12.00	2.50	6.0	44	209	4.500
65	13.00	2.50	6.0	40	209	4.500
65	14.00	2.50	6.0	37	209	4.500
65	15.00	2.50	6.0	35	209	4.500
65	16.00	2.50	6.0	33	209	4.500

- The center thickness of plus specifications is available up to 20.0mm.
- The extra fee of adding each 1.0mm on thickness is USD0.20/pair.
- The extra fee for making Hard-coating (Non-tintable) on both sides is USD0.50/pair.
- The extra fee for making Hard-coating (Non-tintable) on both sides and AR Multi-coating + Hydrophobic + EMI coating on the convex (+) side is USD1.00/pair.

Available Power Range

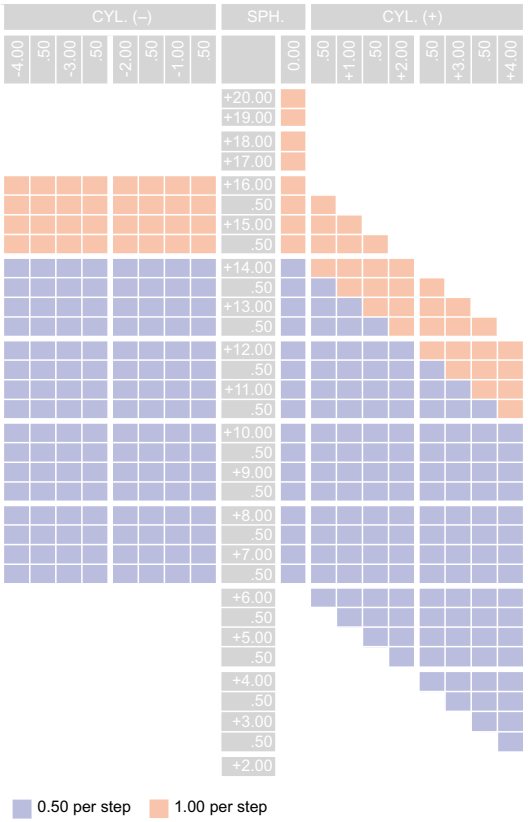

Luxe 150 - Dia70mm



CR-39 1.5

Price List

USD/Pair

	Sph.		Sph./Cyl.	
	±G2, ±G4 & ±G6	-G8[4] & -G10[4]	±G2.2, ±G4.2 & ±G6.2	±G2.4, ±G4.4 & -G6.4
Un-coated	0.750	1.200	0.750	1.200
HC Non-Tnt.[1]	0.930	1.400	0.930	1.400
HC Tintable[2]	1.550	2.100	1.550	2.100
HMC+EMI[3]	1.550	2.100	1.550	2.100

Remark 1 HC Non-Tnt. means Non-tintable Hard-coated, pencil hardness up to 7H.

Remark 2 HC Tintable means Color Tintable Hard-coated, pencil hardness up to 6H, min. quantity of each shipment is 5,000 pairs.

Remark 3 HMC+EMI including Hard + AR Multi-coating + Hydrophobic and Electro Magnetic Interference Blocking.
Super Hydrophobic is available with a surcharge of USD0.30/pair and min. quantity of each shipment is 3,000 pairs.

Remark 4 0.50 per step instead of 0.25.

Semi-finished Lens

USD/Pair

Dia. (mm)	Curve		C. Thick. (mm)	Curve Radius (mm)		Price
	CVX(+)	CCV(-)		CVX(+)	CCV(-)	
70	0.00	6.00	6.0	0	87	1.800
70	2.00	6.00	6.0	262	87	1.800
70	4.00	6.00	6.0	131	87	1.800
70	6.00	6.00	6.0	87	87	1.800
70	8.00	4.00	10.0	65	131	2.000
70	10.00	4.00	12.0	52	131	2.000

- The edge thickness of minus specifications is available up to 20.0mm; the center thickness of plus specifications is available up to 20.0mm;
- The extra fee of adding each 1.0mm on thickness is USD0.25/pair.
- The extra fee for making Hard-coating (Non-tintable) on both sides is USD0.50/pair.
- The extra fee for making Hard-coating (Non-tintable) on both sides and AR Multicoating + Hydrophobic + EMI coating on the convex (+) side is USD1.00/pair.

Curve & Thickness

Sph.	Curve		C. Thick. (mm)
	CVX (+)	CCV (-)	
0.00	5.00	5.00	2.0
.25	4.75	5.00	2.0
.50	4.50	5.00	2.0
.75	4.25	5.00	2.0
-1.00	4.00	5.00	2.0
.25	3.75	5.00	1.5
.50	3.50	5.00	1.5
.75	3.25	5.00	1.5
-2.00	3.00	5.00	1.5
.25	2.75	5.00	1.5
.50	2.50	5.00	1.5
.75	2.25	5.00	1.5
-3.00	2.00	5.00	1.5
.25	2.50	5.75	1.5
.50	2.25	5.75	1.5
.75	2.00	5.75	1.5
-4.00	1.75	5.75	1.5
.25	2.75	7.00	1.2
.50	2.50	7.00	1.2
.75	2.25	7.00	1.2
-5.00	2.00	7.00	1.2
.25	1.75	7.00	1.2
.50	1.50	7.00	1.2
.75	1.25	7.00	1.2
-6.00	1.00	7.00	1.2

Sph.	Curve		E. Thick. (mm)
	CVX (+)	CCV (-)	
.25	4.25	4.00	1.8
.50	4.50	4.00	1.8
.75	4.75	4.00	1.8
+1.00	5.00	4.00	1.8
.25	5.25	4.00	1.5
.50	5.50	4.00	1.5
.75	5.75	4.00	1.5
+2.00	6.00	4.00	1.5
.25	5.25	3.00	1.5
.50	5.50	3.00	1.5
.75	5.75	3.00	1.5
+3.00	6.00	3.00	1.5
.25	6.25	3.00	1.5
.50	6.50	3.00	1.5
.75	6.75	3.00	1.5
+4.00	7.00	3.00	1.5
.25	6.25	2.00	1.2
.50	6.50	2.00	1.2
.75	6.75	2.00	1.2
+5.00	7.00	2.00	1.2
.25	7.25	2.00	1.2
.50	7.50	2.00	1.2
.75	7.75	2.00	1.2
+6.00	8.00	2.00	1.2

Available Power Range

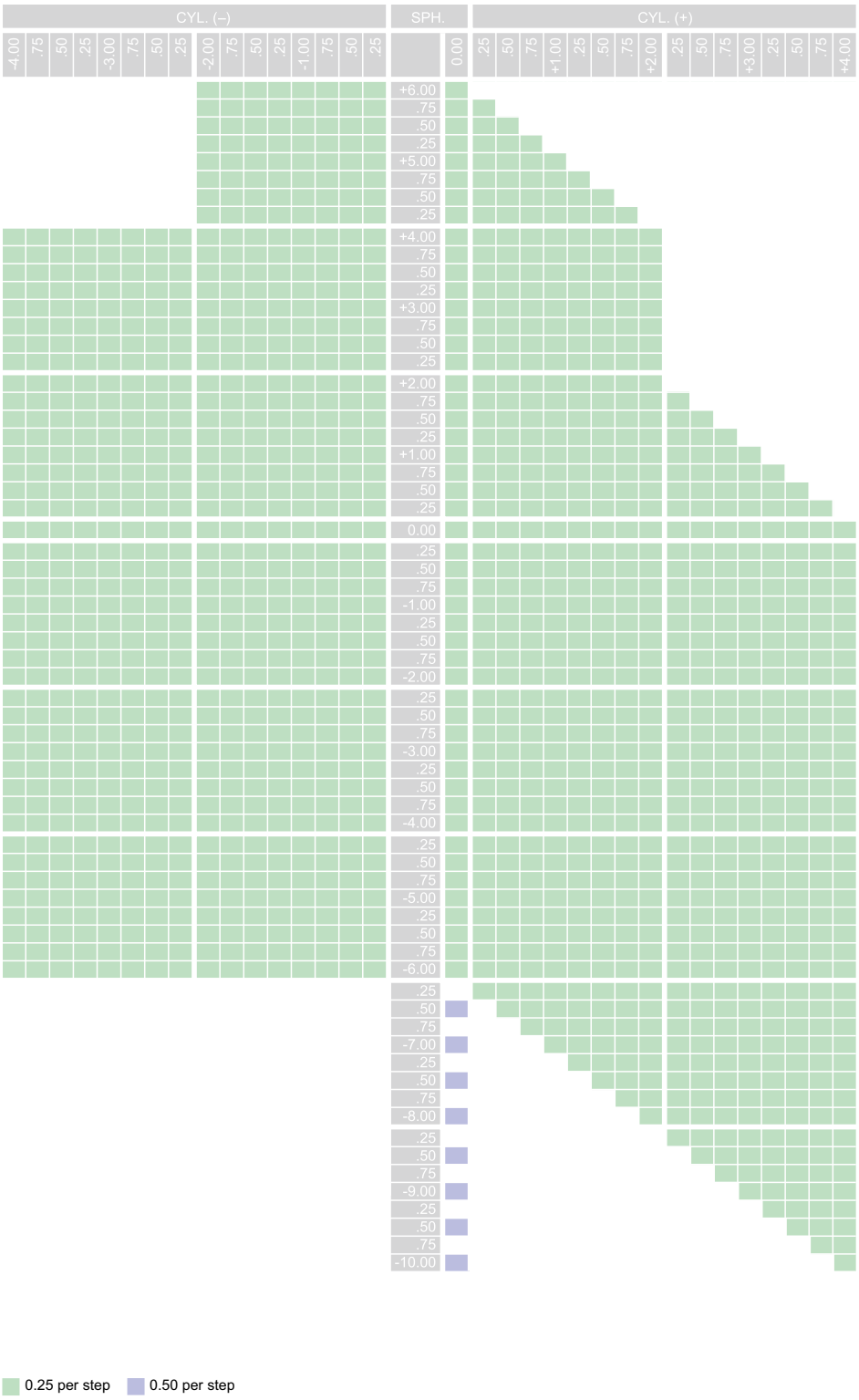

Bifocal 150 Round-shape - Dia65/28mm

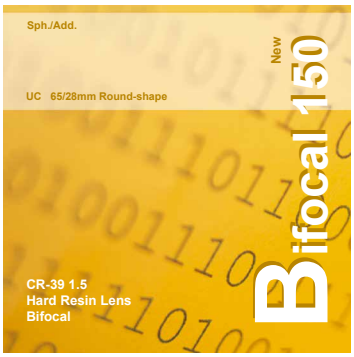

Price List

USD/Pair

	Distance Portion									
	0.00 Add. +0.75 - +3.00	+0.25 - +3.00	+3.50 - +4.00	+4.50 - +5.00	+5.50 - +6.00	-0.25 - -2.00	-2.25 - -3.00	-3.50 - -4.00	-4.50 - -5.00	-5.50 - -6.00
Add.		Add. +1.00 to +3.00								
Un-coated	0.650	0.650	1.170	1.270	1.370	0.750	1.170	1.270	1.370	1.470
HC Non-tintable[1]	0.830	0.830	1.350	1.450	1.550	0.930	1.350	1.450	1.550	1.650
HC Tintable[2]	1.450	1.450	1.970	2.070	2.170	1.550	1.970	2.070	2.170	2.270
HMC+EMI[3]	1.450	1.450	1.970	2.070	2.170	1.550	1.970	2.070	2.170	2.270

Distance Portion	0.00	0.00	+0.25 - +3.00	-0.25 - -2.00
Cyl.	±0.25 - ±3.00	±0.25 - ±3.00	+0.25 - +1.00	-0.25 - -1.00
Axis	x180	x90	x180	x90
Add.	Add. +1.00 to +3.00			
Un-coated	0.870	0.870	0.970	0.970
HC Non-tintable[1]	1.050	1.050	1.150	1.150
HC Tintable[2]	1.670	1.670	1.770	1.770
HMC+EMI[3]	1.670	1.670	1.770	1.770

Remark 1 HC Non-tintable. means Non-tintable Hard-coated, pencil hardness up to 7H.

Remark 2 HC Tintable means Color Tintable Hard-coated, pencil hardness up to 6H, min. quantity of each shipment is 5,000 pairs.

Remark 3 HMC+EMI including Hard + AR Multi-coating + Hydrophobic and Electro Magnetic Interference Blocking.
Super Hydrophobic is available with a surcharge of USD0.30/pair and min. quantity of each shipment is 3,000 pairs.

Semi-finished Lens

USD/Pair

Dia. (mm)	Curve CVX(+)	Curve CCV(-)	C. Thick. (mm)	Curve Radius (mm) CVX(+)	Curve Radius (mm) CCV(-)	Price
70	2.00	6.00	6.0	262	87	1.900
70	4.00	6.00	6.0	131	87	1.900
70	6.00	6.00	6.0	87	87	1.900
70	8.00	4.00	10.0	65	131	2.100

- The edge thickness of minus specifications is available up to 20.0mm; the center thickness of plus specifications is available up to 20.0mm;
- The extra fee of adding each 1.0mm on thickness is USD0.25/pair.
- The extra fee for making Hard-coating (Non-tintable) on both sides is USD0.50/pair.
- The extra fee for making Hard-coating (Non-tintable) on both sides and AR Multi-coating + Hydrophobic + EMI coating on the convex (+) side is USD1.00/pair.

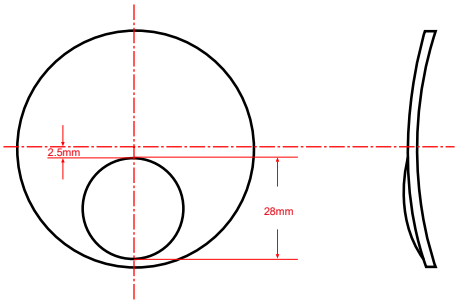

Available Power Range - Dia65mm, Seg. 28mm

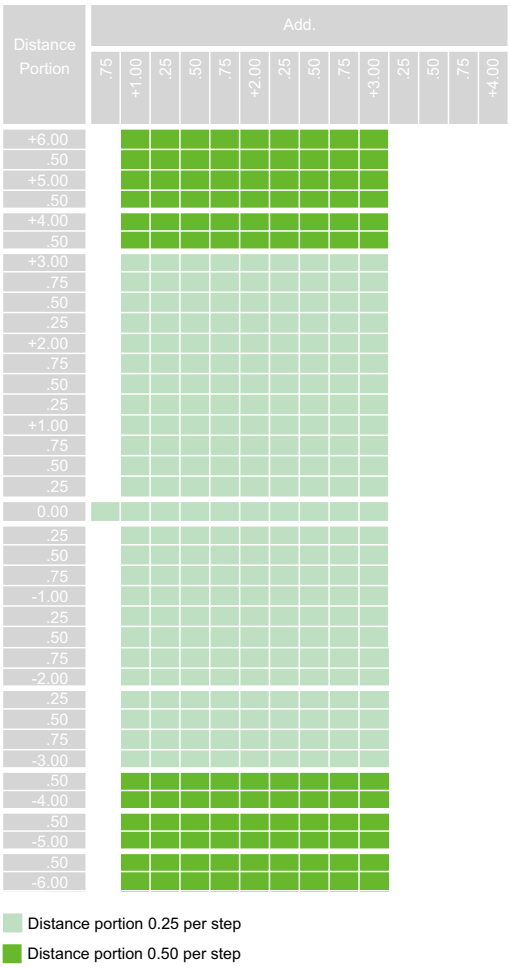

Bifocal 150 Flat-top - Dia70/28mm



Price List

USD/Pair

Base 5.00	Plano / Power	Plus / Power	Minus / Power
Un-coated	1.100	1.100	1.200
HC Non-Tnt.[1]	1.300	1.300	1.400
HC Tintable[2]	1.900	1.900	2.000
HMC+EMI[3]	1.900	1.900	2.000

Remark 1 HC Non-Tnt. means Non-tintable Hard-coated, pencil hardness up to 7H.

Remark 2 HC Tintable means Color Tintable Hard-coated, pencil hardness up to 6H, min. quantity of each shipment is 5,000 pairs.

Remark 3 HMC+EMI including Hard + AR Multi-coating + Hydrophobic and Electro Magnetic Interference Blocking. Super Hydrophobic is available with a surcharge of USD0.30/pair and min. quantity of each shipment is 3,000 pairs.

Semi-finished Lens

USD/Pair

Dia. (mm)	Curve CVX(+)	Curve CCV(-)	C. Thick. (mm)	Curve Radius (mm) CVX(+)	Curve Radius (mm) CCV(-)	Price
70	2.00	6.00	6.0	262	87	2.000
70	4.00	6.00	6.0	131	87	2.000
70	6.00	6.00	6.0	87	87	2.000
70	8.00	4.00	10.0	65	131	2.200

- The edge thickness of minus specifications is available up to 20.0mm; the center thickness of plus specifications is available up to 20.0mm;
- The extra fee of adding each 1.0mm on thickness is USD0.25/pair.
- The extra fee for making Hard-coating (Non-tintable) on both sides is USD0.50/pair.
- The extra fee for making Hard-coating (Non-tintable) on both sides and AR Multicoating + Hydrophobic + EMI coating on the convex (+) side is USD1.00/pair.

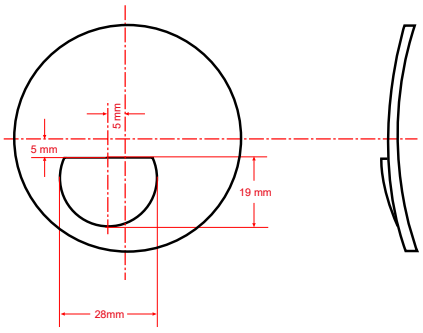

Available Power Range - Dia70mm, Seg. 28mm

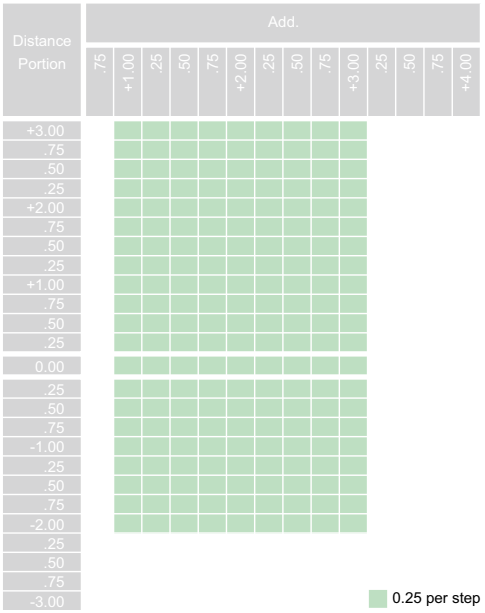

Progressive 150 - Dia70mm

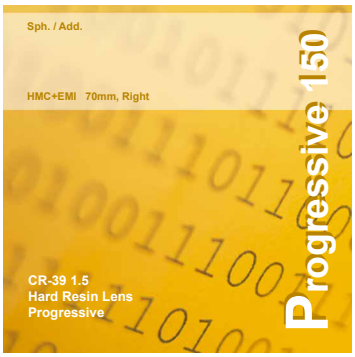

Price List

USD/Pair

Corridor Length	14mm Regular Corridor	17mm Long Corridor
Nominal Base	4.00 Base	4.00 Base
True Base	3.50 Base	3.50 Base
Un-coated	2.000	2.000
HC Non-Tnt.[1]	2.250	2.250
HC Tintable[2]	3.000	3.000
HMC+EMI[3]	3.000	3.000

Remark 1 HC Non-Tnt. means Non-tintable Hard-coated, pencil hardness up to 7H.

Remark 2 HC Tintable means Color Tintable Hard-coated, pencil hardness up to 6H, min. quantity of each shipment is 5,000 pairs.

Remark 3 HMC+EMI including Hard + AR Multi-coating + Hydrophobic and Electro Magnetic Interference Blocking. Super Hydrophobic is available with a surcharge of USD0.30/pair and min. quantity of each shipment is 3,000 pairs.

Semi-finished Lens

USD/Pair

Dia. (mm)	Curve CVX(+)	Curve CCV(-)	C. Thick. (mm)	Curve Radius (mm) CVX(+)	Curve Radius (mm) CCV(-)	Price
70	1.50	6.00	6.0	349	87	4.500
70	3.50	6.00	6.0	149	87	4.500
70	5.75	6.00	6.0	91	87	4.500
70	7.75	6.00	8.0	67	87	4.500

- The edge thickness of minus specifications is available up to 12.0mm; the center thickness of plus specifications is available up to 12.0mm; the center thickness of thickness specifications is available up to 10.0mm.
- The extra fee of adding each 1.0mm on thickness is USD0.30/pair.
- The extra fee for making Hard-coating (Non-tintable) on both sides is USD0.50/pair.
- The extra fee for making Hard-coating (Non-tintable) on both sides and AR Multi-coating + Hydrophobic + EMI coating on the convex (+) side is USD1.00/pair.

Available Power Range - Dia70mm

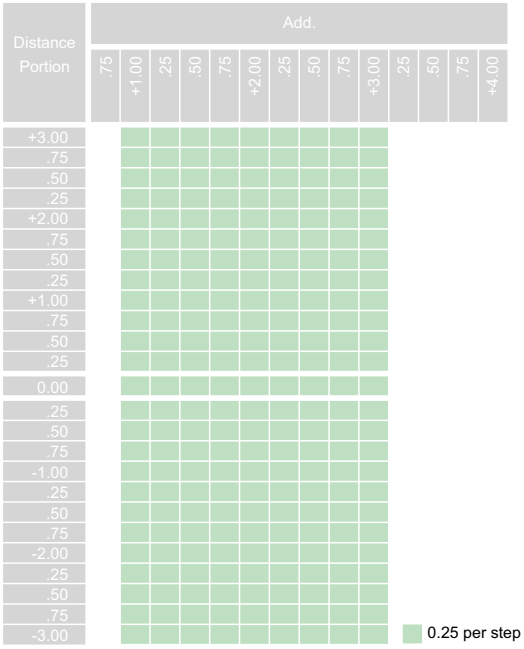

Main Reference Points

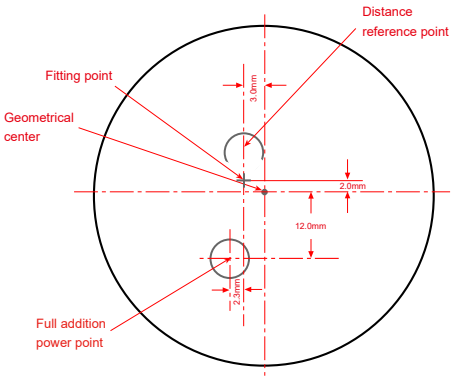

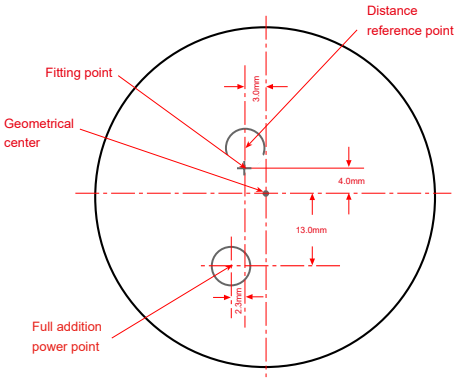

14mm Regular Corridor Design Features

- Corridor length 14mm from fit point to full addition power.
- Minimum fitting height 15mm.
- Separate designs for the left and the right eyes.
- Soft design for fast adaptation.

17mm Long Corridor Design Features

- Corridor length 17mm from fit point to full addition power.
- Minimum fitting height 18mm.
- Separate designs for the left and the right eyes.
- Soft and comfortable design for fast adaptation with very low distortion.

1.56 Middle Index Hard Resin Lenses



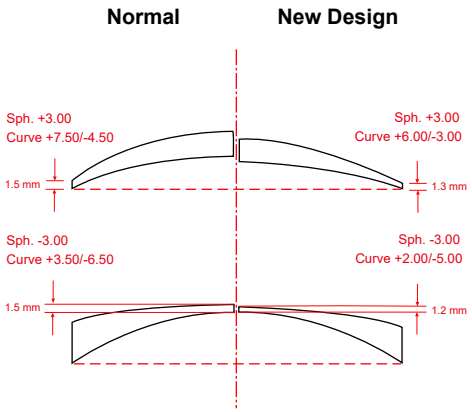

- Refraction index N_d=1.56.
- Abbe value 39.
- Density 1.20 g/cm^3.
- Newly designed products, slim and thin.
- Thinner and lighter than CR-39 lenses.
- High scratch resistance, super-hard protection coating is available (tintable and non-tintable).
- HMC+EMI coating is available in greenish and bluish colors. Super Hydrophobic is also available.
- Absorbing UV-ray and providing effective protection to the eyes.
- UV400 + Blue Cut available.

Mini 156 Plus - Dia60mm



Price List

USD/Pair

	Sph.		Sph./Cyl.		
	+G2, +G4 & +G6	+G8[4] & +G10[4]	+G2.2, +G4.2 & +G6.2	+G8.2[4]	+G2.4, +G4.4 & +G6.4
HC Non-Tnt.[1]	1.080	1.750	1.080	1.970	2.000
HC Tintable[2]	1.700	2.450	1.700	2.600	2.700
HMC+EMI[3]	1.700	2.450	1.700	2.600	2.700

Remark 1 HC Non-Tnt. means Non-tintable Hard-coated, pencil hardness up to 7H.

Remark 2 HC Tintable means Color Tintable Hard-coated, pencil hardness up to 6H, min. quantity of each shipment is 5,000 pairs.

Remark 3 HMC+EMI including Hard + AR Multi-coating + Hydrophobic and Electro Magnetic Interference Blocking.

Super Hydrophobic is available with a surcharge of USD0.30/pair and min. quantity of each shipment is 3,000 pairs.

Remark 4 0.50 per step instead of 0.25.

Available Power Range

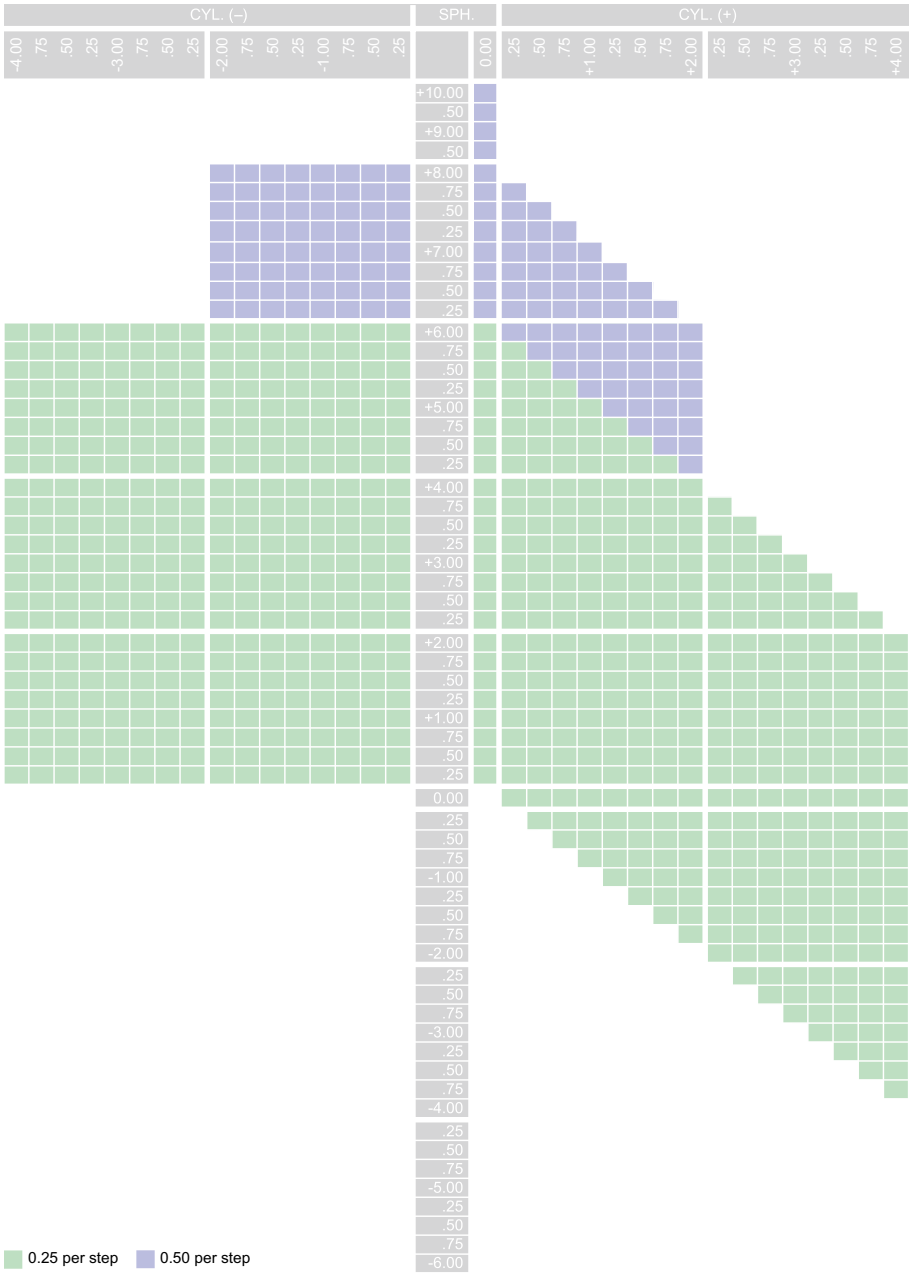

Curve & Thickness

Sph.	Curve		E. Thick. (mm)
	CVX (+)	CCV(-)	
.25	4.25	4.00	1.8
.50	4.50	4.00	1.8
.75	4.75	4.00	1.8
+1.00	5.00	4.00	1.8
.25	5.25	4.00	1.5
.50	5.50	4.00	1.5
.75	5.75	4.00	1.5
+2.00	6.00	4.00	1.5
.25	5.25	3.00	1.5
.50	5.50	3.00	1.5
.75	5.75	3.00	1.5
+3.00	6.00	3.00	1.5
.25	6.25	3.00	1.5
.50	6.50	3.00	1.5
.75	6.75	3.00	1.5
+4.00	7.00	3.00	1.5
.25	6.25	2.00	1.2
.50	6.50	2.00	1.2
.75	6.75	2.00	1.2
+5.00	7.00	2.00	1.2
.25	7.25	2.00	1.2
.50	7.50	2.00	1.2
.75	7.75	2.00	1.2
+6.00	8.00	2.00	1.2

Slim 156 Plus - Dia65mm



Price List

USD/Pair

	Sph.	Sph./Cyl.		
	+G2, +G4 & +G6	+G2.2, +G4.2 & +G6.2	+G2.4 & +G4.4	+G6.4
HC Non-Tnt.[1]	0.880	0.880	1.350	1.350
HC Non-Tnt.[1], UV400+Blue Cut[2]	1.330	1.330	1.800	
HC Tintable[3]	1.500	1.500	2.050	2.050
HMC+EMI[4]	1.500	1.500	2.050	2.050
HMC+EMI[4], UV400+Blue Cut[2]	1.950	1.950	2.500	

Remark 1 HC Non-Tnt. means Non-tintable Hard-coated, pencil hardness up to 7H.

Remark 2 UV400+Blue Cut cuts off harmful ultraviolet light (UV) and absorbs high-energy blue light.

Remark 3 HC Tintable means Color Tintable Hard-coated, pencil hardness up to 6H, min. quantity of each shipment is 5,000 pairs.

Remark 4 HMC+EMI including Hard + AR Multi-coating + Hydrophobic and Electro Magnetic Interference Blocking.
Super Hydrophobic is available with a surcharge of USD0.30/pair and min. quantity of each shipment is 3,000 pairs.

Available Power Range

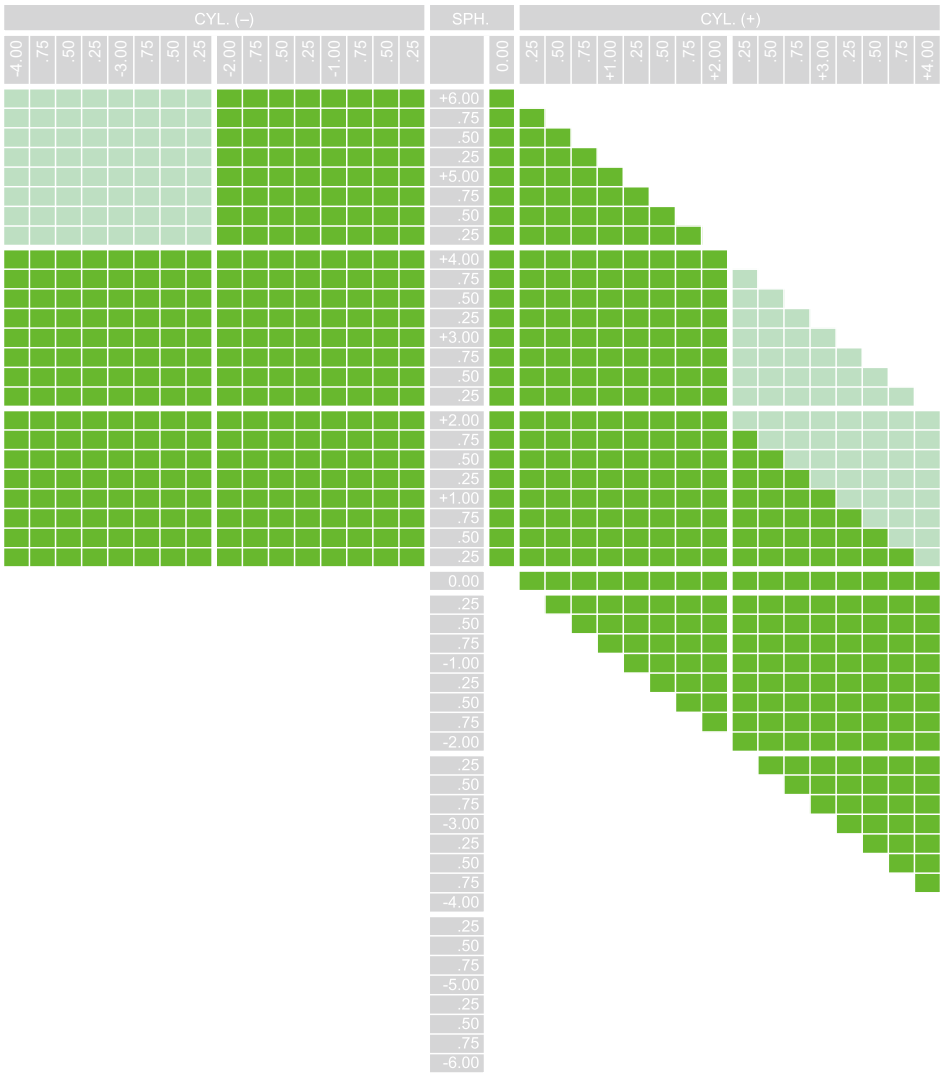

0.25 per step

0.25 per step, UV400+Blue Cut is available

Curve & Thickness

Sph.	Curve		E. Thick. (mm)
	CVX (+)	CCV (-)	
.25	4.25	4.00	1.8
.50	4.50	4.00	1.8
.75	4.75	4.00	1.8
+1.00	5.00	4.00	1.8
.25	5.25	4.00	1.5
.50	5.50	4.00	1.5
.75	5.75	4.00	1.5
+2.00	6.00	4.00	1.5
.25	5.25	3.00	1.5
.50	5.50	3.00	1.5
.75	5.75	3.00	1.5
+3.00	6.00	3.00	1.5
.25	6.25	3.00	1.5
.50	6.50	3.00	1.5
.75	6.75	3.00	1.5
+4.00	7.00	3.00	1.5
.25	6.25	2.00	1.2
.50	6.50	2.00	1.2
.75	6.75	2.00	1.2
+5.00	7.00	2.00	1.2
.25	7.25	2.00	1.2
.50	7.50	2.00	1.2
.75	7.75	2.00	1.2
+6.00	8.00	2.00	1.2

Regular 156 Plus - Dia70mm



Price List

USD/Pair

	Sph.	Sph./Cyl.	
	+G2, +G4 & +G6	+G2.2, +G4.2 & +G6.2	+G2.4 & +G4.4
HC Non-Tnt.[1]	0.930	0.930	1.400
HC Tintable[2]	1.550	1.550	2.100
HMC+EMI[3]	1.550	1.550	2.100

Remark 1 HC Non-Tnt. means Non-tintable Hard-coated, pencil hardness up to 7H.

Remark 2 HC Tintable means Color Tintable Hard-coated, pencil hardness up to 6H, min. quantity of each shipment is 5,000 pairs.

Remark 3 HMC+EMI including Hard + AR Multi-coating + Hydrophobic and Electro Magnetic Interference Blocking.
Super Hydrophobic is available with a surcharge of USD0.30/pair and min. quantity of each shipment is 3,000 pairs.

Semi-finished Lens

USD/Pair

Dia. (mm)	Curve CVX(+)	Curve CCV(-)	C. Thick. (mm)	Curve Radius (mm) CVX(+)	Curve Radius (mm) CCV(-)	Price
70	0.00	6.00	6.0	0	87	1.900
70	2.00	6.00	6.0	262	87	1.900
70	4.00	6.00	6.0	131	87	1.900
70	6.00	6.00	6.0	87	87	1.900
70	8.00	4.00	10.0	65	131	2.100
70	10.00	4.00	12.0	52	131	2.100

- The edge thickness of minus specifications is available up to 20.0mm; the center thickness of plus specifications is available up to 20.0mm;
- The extra fee of adding each 1.0mm on thickness is USD0.25/pair.
- The extra fee for making Hard-coating (Non-tintable) on both sides is USD0.50/pair.
- The extra fee for making Hard-coating (Non-tintable) on both sides and AR Multi-coating + Hydrophobic + EMI coating on the convex (+) side is USD1.00/pair.
- The extra fee for making Hard-coating (Non-tintable) on both sides and AR Multi-coating + Hydrophobic + EMI coating on the convex (+) side together with Blue Cut is USD2.00/pair.

Available Power Range

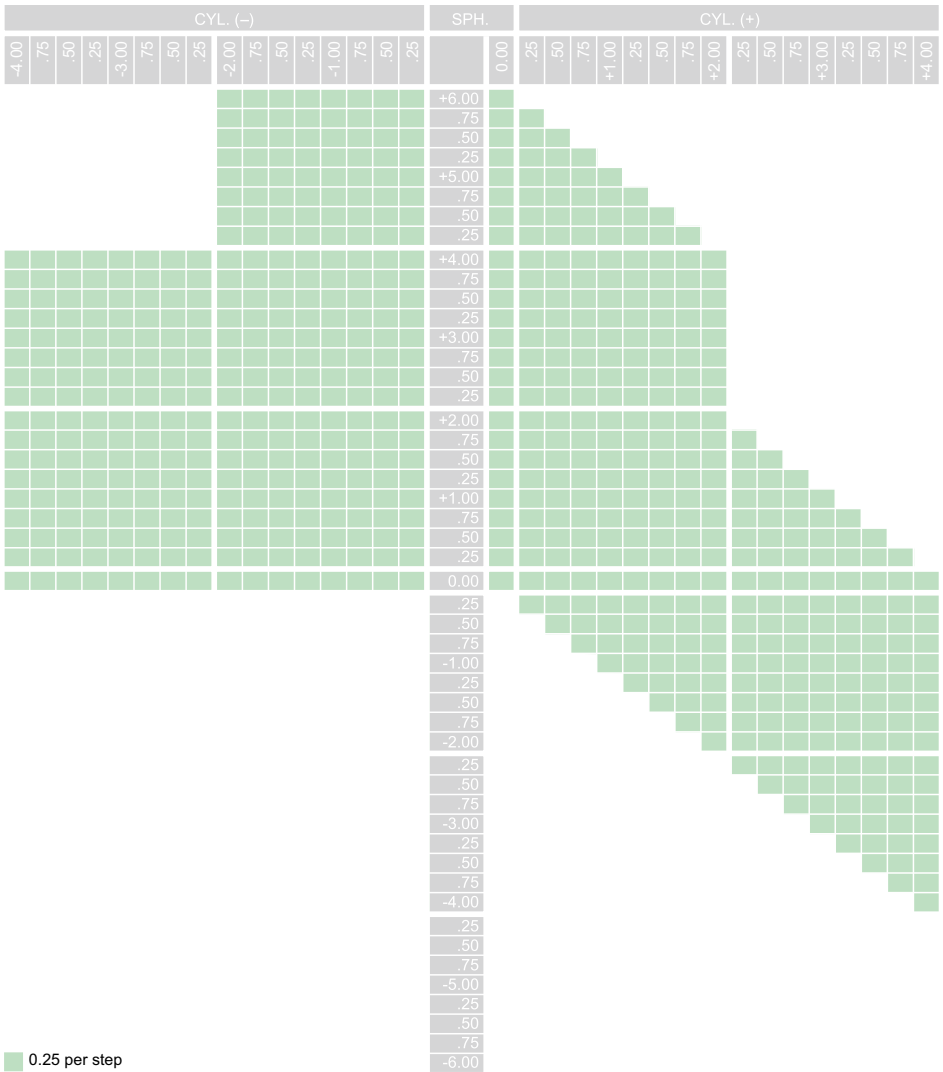

Curve & Thickness

Sph.	Curve CVX (+)	Curve CCV (-)	E. Thick. (mm)
.25	4.25	4.00	1.8
.50	4.50	4.00	1.8
.75	4.75	4.00	1.8
+1.00	5.00	4.00	1.8
.25	5.25	4.00	1.5
.50	5.50	4.00	1.5
.75	5.75	4.00	1.5
+2.00	6.00	4.00	1.5
.25	5.25	3.00	1.5
.50	5.50	3.00	1.5
.75	5.75	3.00	1.5
+3.00	6.00	3.00	1.5
.25	6.25	3.00	1.5
.50	6.50	3.00	1.5
.75	6.75	3.00	1.5
+4.00	7.00	3.00	1.5
.25	6.25	2.00	1.2
.50	6.50	2.00	1.2
.75	6.75	2.00	1.2
+5.00	7.00	2.00	1.2
.25	7.25	2.00	1.2
.50	7.50	2.00	1.2
.75	7.75	2.00	1.2
+6.00	8.00	2.00	1.2

Slim 156 Minus - Dia65mm



Price List

USD/Pair

	Sph.			Sph./Cyl.		
	-G2 & -G4	-G6	-G8[5] & -G10[5]	-G2.2 & -G4.2	-G6.2	-G2.4, -G4.4 & -G6.4
HC Non-Tnt.[1]	0.880	0.880	1.350	0.880	0.880	1.350
HC Non-Tnt.[1], UV400+Blue Cut[2]	1.330			1.330		
HC Tintable[3]	1.500	1.500	2.050	1.500	1.500	2.050
HMC+EMI[4]	1.500	1.500	2.050	1.500	1.500	2.050
HMC+EMI[4], UV400+Blue Cut[2]	1.950			1.950		

Remark 1 HC Non-Tnt. means Non-tintable Hard-coated, pencil hardness up to 7H.

Remark 2 UV400+Blue Cut cuts off harmful ultraviolet light (UV) and absorbs high-energy blue light.

Remark 3 HC Tintable means Color Tintable Hard-coated, pencil hardness up to 6H, min. quantity of each shipment is 5,000 pairs.

Remark 4 HMC+EMI including Hard + AR Multi-coating + Hydrophobic and Electro Magnetic Interference Blocking.
Super Hydrophobic is available with a surcharge of USD0.30/pair and min. quantity of each shipment is 3,000 pairs.

Remark 5 0.50 per step instead of 0.25.

Available Power Range

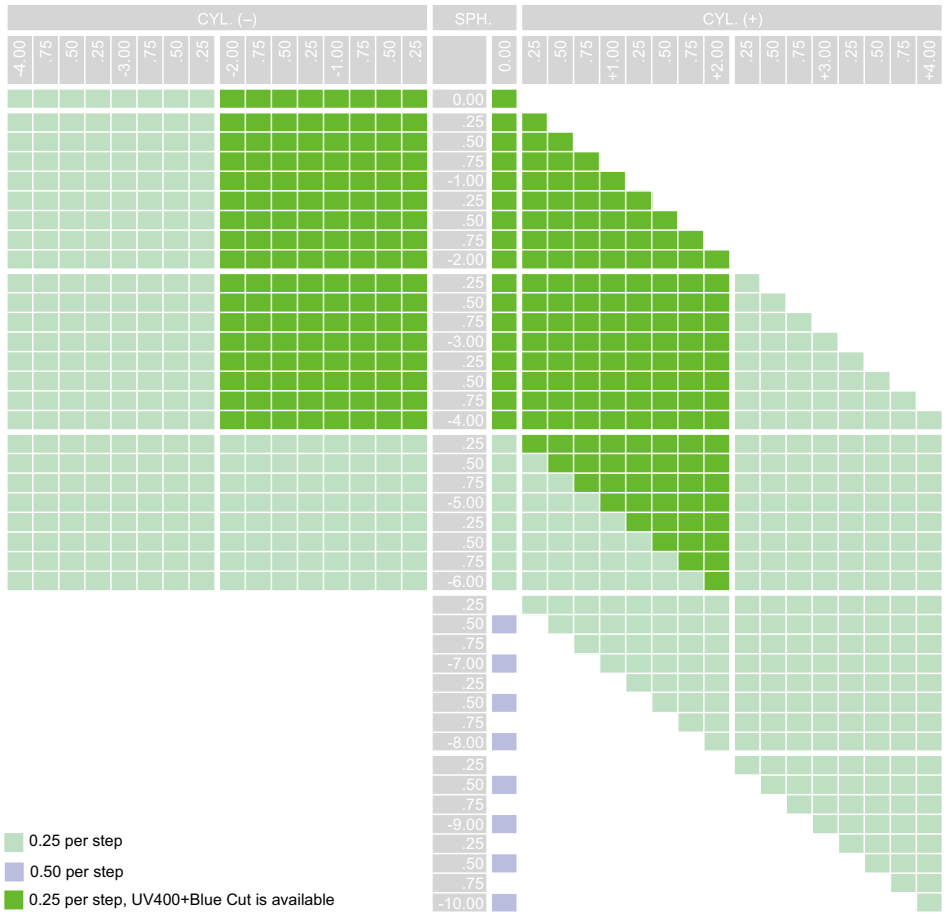

Curve & Thickness

Sph.	Curve		C. Thick. (mm)
	CVX (+)	CCV (-)	
0.00	5.00	5.00	2.0
.25	4.75	5.00	2.0
.50	4.50	5.00	2.0
.75	4.25	5.00	2.0
-1.00	4.00	5.00	2.0
.25	3.75	5.00	1.7
.50	3.50	5.00	1.7
.75	3.25	5.00	1.7
-2.00	3.00	5.00	1.7
.25	2.75	5.00	1.2
.50	2.50	5.00	1.2
.75	2.25	5.00	1.2
-3.00	2.00	5.00	1.2
.25	3.25	6.50	1.2
.50	3.00	6.50	1.2
.75	2.75	6.50	1.2
-4.00	2.50	6.50	1.2
.25	2.25	6.50	1.2
.50	2.00	6.50	1.2
.75	1.75	6.50	1.2
-5.00	1.50	6.50	1.2
.25	1.25	6.50	1.2
.50	1.00	6.50	1.2
.75	1.75	7.50	1.2
-6.00	1.50	7.50	1.2
-.25	1.25	7.50	1.1
.50	1.00	7.50	1.1
.75	0.75	7.50	1.1
-7.00	0.50	7.50	1.1
.25	0.75	8.00	1.1
.50	0.50	8.00	1.1
.75	0.75	8.50	1.1
-8.00	0.50	8.50	1.1
.25	1.25	9.50	1.1
.50	1.00	9.50	1.1
.75	0.75	9.50	1.1
-9.00	0.50	9.50	1.1
.25	0.75	10.00	1.1
.50	0.50	10.00	1.1
.75	0.25	10.00	1.1
-10.00	0.00	10.00	1.0

Regular 156 Minus - Dia70mm



Price List

USD/Pair

	Sph.							
	-G2, -G4 & -G6	-G8	-G10	-G12[5]	-G14[5]	-G16[5]	-G18[5]	-G20[5]
HC Non-Tnt.[1]	0.930	1.400	1.400	2.000	2.000	2.000	3.000	3.000
HC Tintable[2]	1.550	2.100	2.100	3.000	3.000	3.000	4.000	4.000
HMC+EMI[3]	1.550	2.100	2.100	3.000	3.000	3.000	4.000	4.000
HMC+EMI[3], UV400+Blue Cut[4]	2.000	2.550						

	Sph./Cyl.							
	-G2.2, -G4.2 & -G6.2	-G8.2	-G10.2	-G12.2[5]	-G14.2[5]	-G16.2[5]	-G18.2[5]	-G20.2[5]
HC Non-Tnt.[1]	0.930	1.970	1.970	2.500	2.500	2.500	3.500	3.500
HC Tintable[2]	1.550	2.600	2.600	3.500	3.500	3.500	4.500	4.500
HMC+EMI[3]	1.550	2.600	2.600	3.500	3.500	3.500	4.500	4.500
HMC+EMI[3], UV400+Blue Cut[4]	2.000	3.050						

	Sph./Cyl.								
	-G2.4 & -G4.4	-G6.4	-G8.4	-G10.4	-G12.4[5]	-G14.4[5]	-G16.4	-G18.4	-G20.4
HC Non-Tnt.[1]	1.400	1.400	3.500	3.500	4.000	4.000			
HC Tintable[2]	2.100	2.100	4.000	4.000	4.500	4.500			
HMC+EMI[3]	2.100	2.100	4.000	4.000	4.500	4.500			
HMC+EMI[3], UV400+Blue Cut[4]	2.550								

Remark 1 HC Non-Tnt. means Non-tintable Hard-coated, pencil hardness up to 7H.

Remark 2 HC Tintable means Color Tintable Hard-coated, pencil hardness up to 6H, min. quantity of each shipment is 5,000 pairs.

Remark 3 HMC+EMI including Hard + AR Multi-coating + Hydrophobic and Electro Magnetic Interference Blocking.
Super Hydrophobic is available with a surcharge of USD0.30/pair and min. quantity of each shipment is 3,000 pairs.

Remark 4 UV400+Blue Cut cuts off harmful ultraviolet light (UV) and absorbs high-energy blue light.

Remark 5 0.50 per step instead of 0.25.

Semi-finished Lens

USD/Pair

Dia. (mm)	Curve		C. Thick. (mm)	Curve Radius (mm)		Price
	CVX(+)	CCV(-)		CVX(+)	CCV(-)	
70	0.00	6.00	6.0	0	87	1.900
70	2.00	6.00	6.0	262	87	1.900
70	4.00	6.00	6.0	131	87	1.900
70	6.00	6.00	6.0	87	87	1.900
70	8.00	4.00	10.0	65	131	2.100
70	10.00	4.00	12.0	52	131	2.100

- The edge thickness of minus specifications is available up to 20.0mm; the center thickness of plus specifications is available up to 20.0mm;
- The extra fee of adding each 1.0mm on thickness is USD0.25/pair.
- The extra fee for making Hard-coating (Non-tintable) on both sides is USD0.50/pair.
- The extra fee for making Hard-coating (Non-tintable) on both sides and AR Multicoating + Hydrophobic + EMI coating on the convex (+) side is USD1.00/pair.
- The extra fee for making Hard-coating (Non-tintable) on both sides and AR Multicoating + Hydrophobic + EMI coating on the convex (+) side together with Blue Cut is USD2.00/pair.

Curve & Thickness

Sph.	Curve		C. Thick. (mm)
	CVX (+)	CCV (-)	
0.00	5.00	5.00	2.0
.25	4.75	5.00	2.0
.50	4.50	5.00	2.0
.75	4.25	5.00	2.0
-1.00	4.00	5.00	2.0
.25	3.75	5.00	1.7
.50	3.50	5.00	1.7
.75	3.25	5.00	1.7
-2.00	3.00	5.00	1.7
.25	2.75	5.00	1.2
.50	2.50	5.00	1.2
.75	2.25	5.00	1.2
-3.00	2.00	5.00	1.2
.25	3.25	6.50	1.2
.50	3.00	6.50	1.2
.75	2.75	6.50	1.2
-4.00	2.50	6.50	1.2
.25	2.25	6.50	1.2
.50	2.00	6.50	1.2
.75	1.75	6.50	1.2
-5.00	1.50	6.50	1.2
.25	1.25	6.50	1.2
.50	1.00	6.50	1.2
.75	1.75	7.50	1.2
-6.00	1.50	7.50	1.2

Sph.	Curve		C. Thick. (mm)
	CVX (+)	CCV (-)	
-6.25	1.25	7.50	1.1
.50	1.00	7.50	1.1
.75	0.75	7.50	1.1
-7.00	0.50	7.50	1.1
.25	0.75	8.00	1.1
.50	0.50	8.00	1.1
.75	0.75	8.50	1.1
-8.00	0.50	8.50	1.1
.25	1.25	9.50	1.1
.50	1.00	9.50	1.1
.75	0.75	9.50	1.1
-9.00	0.50	9.50	1.1
.25	0.75	10.00	1.1
.50	0.50	10.00	1.1
.75	0.25	10.00	1.1
-10.00	0.00	10.00	1.0

Available Power Range

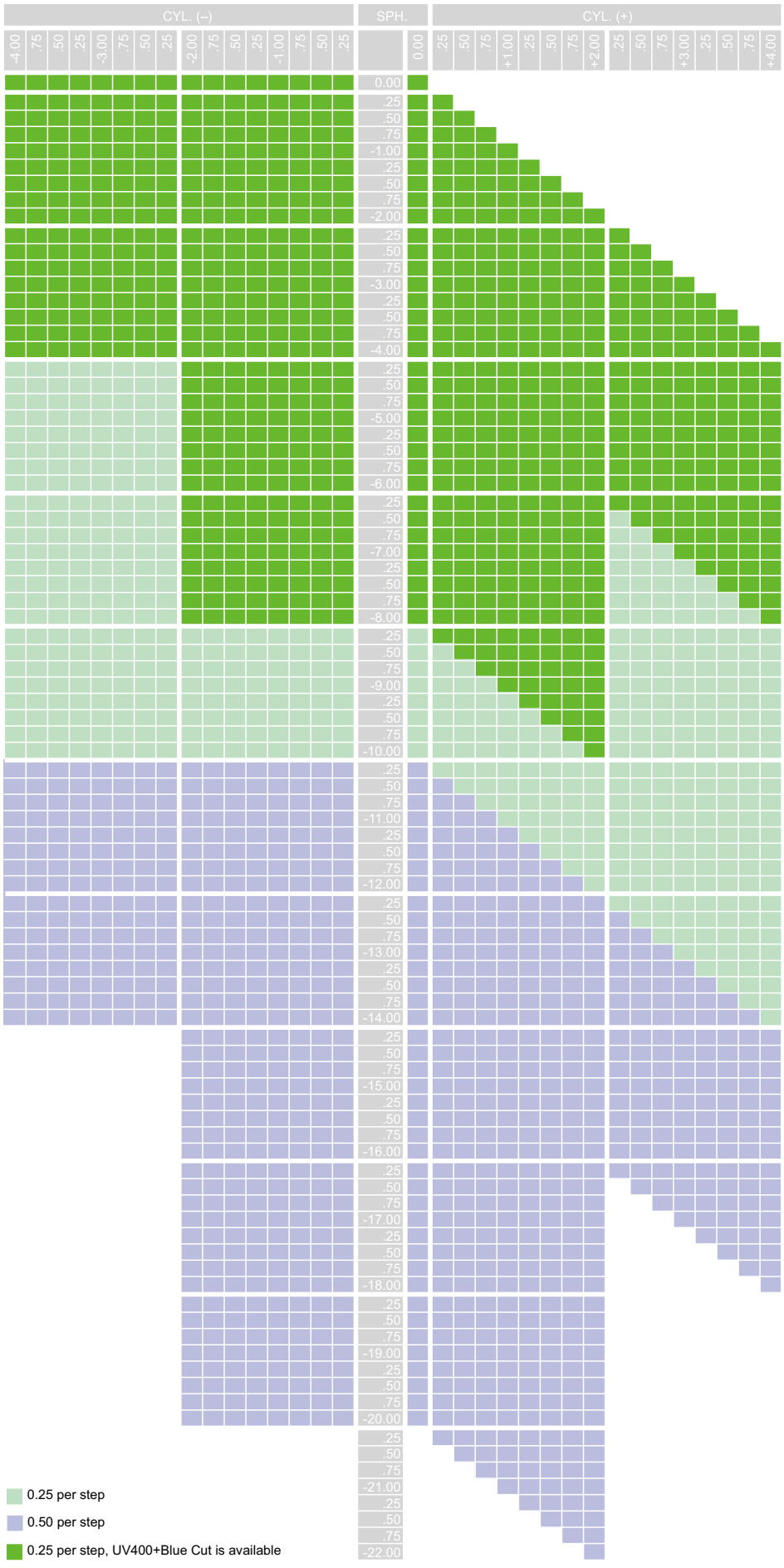

Bifocal 156 Round-shape - Dia65/28mm

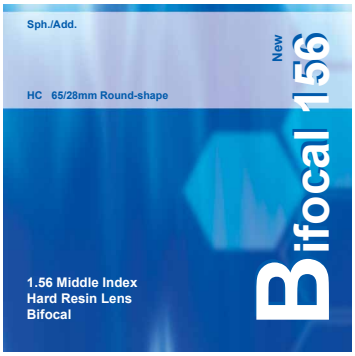

Price List

USD/Pair

	Distance Portion									
	0.00 Add. +0.75 - +3.00	+0.25 - +3.00	+3.50 - +4.00	+4.50 - +5.00	+5.50 - +6.00	-0.25 - -2.00	-2.25 - -3.00	-3.50 - -4.00	-4.50 - -5.00	-5.50 - -6.00
Add.		Add. +1.00 to +3.00								
HC Non-tintable[1]	0.880	0.880	1.400	1.500	1.600	0.980	1.400	1.500	1.600	1.700
HC Non-tintable[1], UV400+Blue Cut[2]	1.330	1.330				1.430	1.850			
HC Tintable[3]	1.500	1.500	2.020	2.120	2.220	1.600	2.020	2.120	2.220	2.320
HMC+EMI[4]	1.500	1.500	2.020	2.120	2.220	1.600	2.020	2.120	2.220	2.320
HMC+EMI[4], UV400+Blue Cut[2]	1.950	1.950				2.050	2.470			

Distance Portion	0.00	0.00	+0.25 - +3.00	-0.25 - -2.00
Cyl.	±0.25 - ±3.00	±0.25 - ±3.00	+0.25 - +1.00	-0.25 - -1.00
Axis	x180	x90	x180	x90
Add.	Add. +1.00 to +3.00			
HC Non-tintable[1]	1.100	1.100	1.200	1.200
HC Non-tintable[1], UV400+Blue Cut[2]	1.550	1.550	1.650	1.650
HC Tintable[3]	1.720	1.720	1.820	1.820
HMC+EMI[4]	1.720	1.720	1.820	1.820
HMC+EMI[4], UV400+Blue Cut[2]	2.170	2.170	2.270	2.270

Remark 1 HC Non-tintable. means Non-tintable Hard-coated, pencil hardness up to 7H.

Remark 2 UV400+Blue Cut cuts off harmful ultraviolet light (UV) and absorbs high-energy blue light.

Remark 3 HC Tintable means Color Tintable Hard-coated, pencil hardness up to 6H, min. quantity of each shipment is 5,000 pairs.

Remark 4 HMC+EMI including Hard + AR Multi-coating + Hydrophobic and Electro Magnetic Interference Blocking.
Super Hydrophobic is available with a surcharge of USD0.30/pair and min. quantity of each shipment is 3,000 pairs.

Available Power Range - Dia65mm, Seg. 28mm

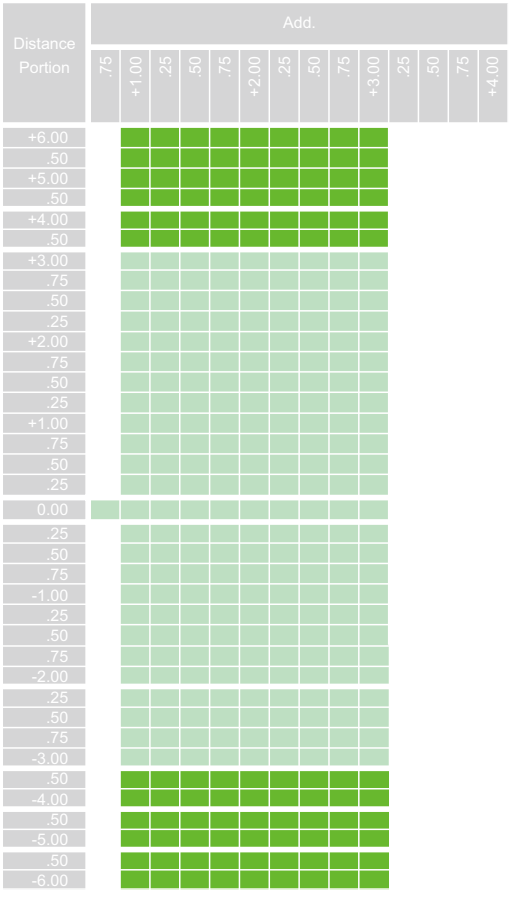

Semi-finished Lens

USD/Pair

Dia. (mm)	Curve		C. Thick. (mm)	Curve Radius (mm)		Price
	CVX(+)	CCV(-)		CVX(+)	CCV(-)	
70	2.00	6.00	6.0	262	87	2.000
70	4.00	6.00	6.0	131	87	2.000
70	6.00	6.00	6.0	87	87	2.000
70	8.00	4.00	10.0	65	131	2.200

- The edge thickness of minus specifications is available up to 20.0mm; the center thickness of plus specifications is available up to 20.0mm;
- The extra fee of adding each 1.0mm on thickness is USD0.25/pair.
- The extra fee for making Hard-coating (Non-tintable) on both sides is USD0.50/pair.
- The extra fee for making Hard-coating (Non-tintable) on both sides and AR Multi-coating + Hydrophobic + EMI coating on the convex (+) side is USD1.00/pair.
- The extra fee for making Hard-coating (Non-tintable) on both sides and AR Multi-coating + Hydrophobic + EMI coating on the convex (+) side together with Blue Cut is USD2.00/pair.

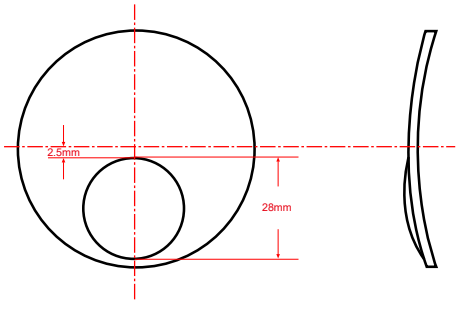

Bifocal 156 Flat-top - Dia70/28mm

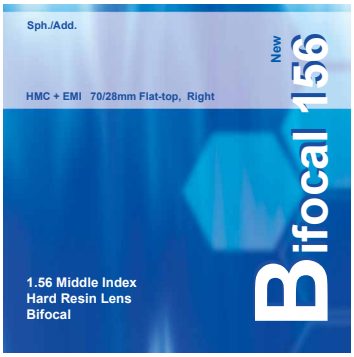

Price List

USD/Pair

Base 5.00	Plano / Power	Plus / Power	Minus / Power
HC Non-Tnt.[1]	1.400	1.400	1.500
HC Tintable[2]	2.000	2.000	2.100
HMC+EMI[3]	2.000	2.000	2.100
HMC+EMI[3], UV400+Blue Cut[4]	3.000	3.000	3.100

Remark 1 HC Non-Tnt. means Non-tintable Hard-coated, pencil hardness up to 7H.

Remark 2 HC Tintable means Color Tintable Hard-coated, pencil hardness up to 6H, min. quantity of each shipment is 5,000 pairs.

Remark 3 HMC+EMI including Hard + AR Multi-coating + Hydrophobic and Electro Magnetic Interference Blocking.
Super Hydrophobic is available with a surcharge of USD0.30/pair and min. quantity of each shipment is 3,000 pairs.

Remark 4 UV400+Blue Cut cuts off harmful ultraviolet light (UV) and absorbs high-energy blue light.

Semi-finished Lens

USD/Pair

Dia. (mm)	Curve		C. Thick. (mm)	Curve Radius (mm)		Price
	CVX(+)	CCV(-)		CVX(+)	CCV(-)	
70	2.00	6.00	6.0	262	87	2.100
70	4.00	6.00	6.0	131	87	2.100
70	6.00	6.00	6.0	87	87	2.100
70	8.00	4.00	10.0	65	131	2.300

- The edge thickness of minus specifications is available up to 20.0mm; the center thickness of plus specifications is available up to 20.0mm;
- The extra fee of adding each 1.0mm on thickness is USD0.25/pair.
- The extra fee for making Hard-coating (Non-tintable) on both sides is USD0.50/pair.
- The extra fee for making Hard-coating (Non-tintable) on both sides and AR Multi-coating + Hydrophobic + EMI coating on the convex (+) side is USD1.00/pair.
- The extra fee for making Hard-coating (Non-tintable) on both sides and AR Multi-coating + Hydrophobic + EMI coating on the convex (+) side together with Blue Cut is USD2.00/pair.

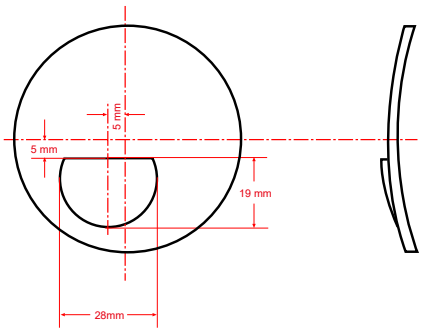

Available Power Range - Dia70mm, Seg. 28mm

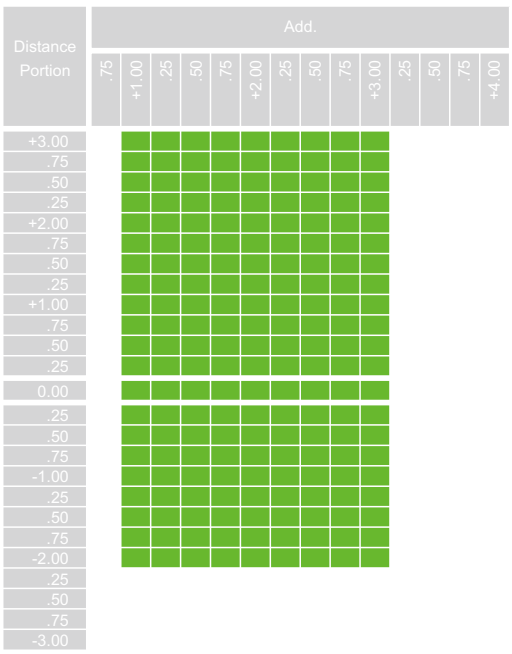

0.25 per step, UV400+Blue Cut is available

Progressive 156 - Dia70mm



Price List

USD/Pair

Corridor Length	12mm Short Corridor	14mm Regular Corridor
Nominal Base	4.00 Base	4.00 Base
True Base	3.50 Base	3.50 Base
Un-coated	2.050	2.050
HC Non-Tnt.[1]	2.300	2.300
HC Tintable[2]	3.050	3.050
HMC+EMI[3]	3.050	3.050
HMC+EMI[3], UV400+Blue Cut[4]	4.050	4.050

Remark 1 HC Non-Tnt. means Non-tintable Hard-coated, pencil hardness up to 7H.

Remark 2 HC Tintable means Color Tintable Hard-coated, pencil hardness up to 6H, min. quantity of each shipment is 5,000 pairs.

Remark 3 HMC+EMI including Hard + AR Multi-coating + Hydrophobic and Electro Magnetic Interference Blocking.
Super Hydrophobic is available with a surcharge of USD0.30/pair and min. quantity of each shipment is 3,000 pairs.

Remark 4 UV400+Blue Cut cuts off harmful ultraviolet light (UV) and absorbs high-energy blue light.

Semi-finished Lens

USD/Pair

Dia. (mm)	Curve CVX(+)	Curve CCV(-)	C. Thick. (mm)	Curve Radius (mm) CVX(+)	Curve Radius (mm) CCV(-)	Price
70	1.50	6.00	6.0	349	87	4.600
70	3.50	6.00	6.0	149	87	4.600
70	5.75	6.00	6.0	91	87	4.600
70	7.75	6.00	8.0	67	87	4.600

- The edge thickness of minus specifications is available up to 12.0mm;
  the center thickness of plus specifications is available up to 12.0mm;
  the center thickness of thickness specifications is available up to 10.0mm.
- The extra fee of adding each 1.0mm on thickness is USD0.30/pair.
- The extra fee for making Hard-coating (Non-tintable) on both sides is USD0.50/pair.
- The extra fee for making Hard-coating (Non-tintable) on both sides and AR Multi-coating + Hydrophobic + EMI coating on the convex (+) side is USD1.00/pair.
- The extra fee for making Hard-coating (Non-tintable) on both sides and AR Multi-coating + Hydrophobic + EMI coating on the convex (+) side together with Blue Cut is USD2.00/pair.

Available Power Range - Dia70mm

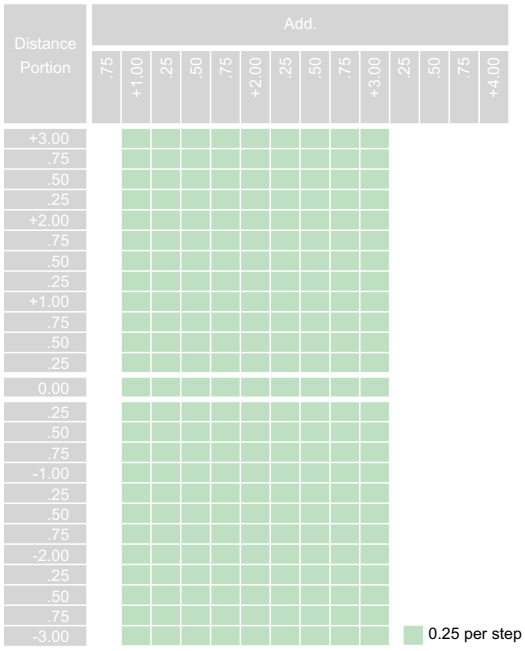

Main Reference Points

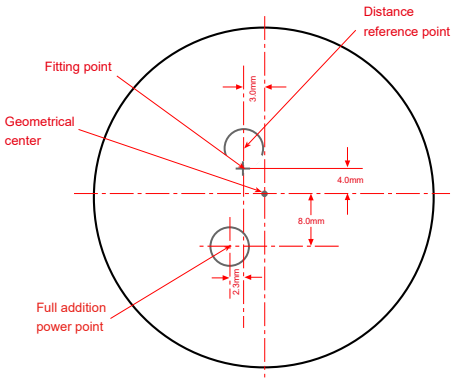

12mm Short Corridor Design Features

- Corridor length 12mm from fit point to full addition power, designed for small size frames.
- Minimum fitting height 13mm.
- Separate designs for the left and the right eyes.
- Soft design for fast adaptation.

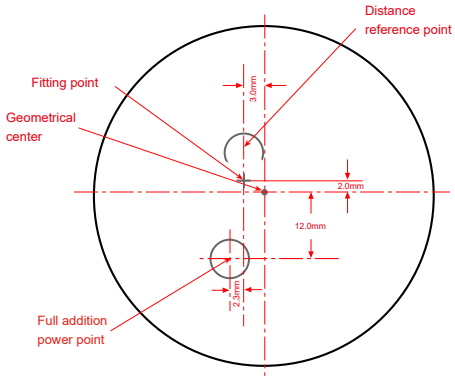

14mm Regular Corridor Design Features

- Corridor length 14mm from fit point to full addition power.
- Minimum fitting height 15mm.
- Separate designs for the left and the right eyes.
- Soft design for fast adaptation.

1.56/1.6 Photochromic Hard Resin Lenses



Photo 156/160

- Refraction index N_d=1.56 & N_d=1.60
- Abbe value 42 (N_d=1.56) & 41 (N_d=1.60)
- Density 1.16 g/cm^3 (N_d=1.56) & 1.28 g/cm^3 (N_d=1.60)
- Can be used well throughout the year, both indoor and outdoor, in all climates and for many different activities.
- Clear background color, high original transmittance, high rate of darkening in the sun.
- High rate of fading out of the sun, thorough fading capability.
- Grey and brown colors are available.
- High scratch resistance, super-hard protection coating is available.
- HMC+EMI coating is available in greenish and bluish colors. Super Hydrophobic is also available.
- Absorbing UV-ray and providing effective protection to the eyes.
- UV400 + Blue Cut is available.

Photo 156 - Dia65mm & Dia70mm (Grey & Brown)

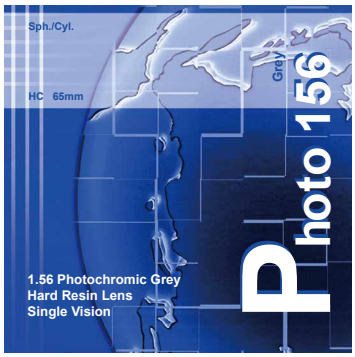

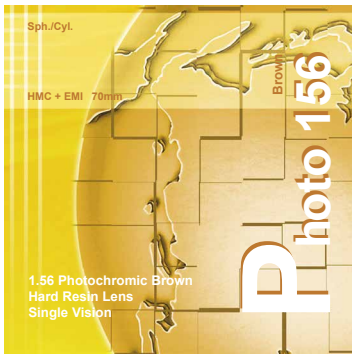

Price List

USD/Pair

Dia65mm	Sph.	Sph./Cyl.		
	+G2, +G4 & +G6	+G2.2, +G4.2 & +G6.2	+G2.4 & +G4.4	+G6.4
HC Non-Tnt.[1]	2.500	2.500	4.000	5.000
HMC+EMI[2]	3.100	3.100	4.600	5.600
HMC+EMI[2], UV400+Blue Cut[3]	4.100	4.100	5.600	6.600

Dia70mm	Sph.	Sph./Cyl.		
	-G2, -G4 & -G6	-G2.2, -G4.2 & -G6.2	-G2.4 & -G4.4	-G6.4
HC Non-Tnt.[1]	2.500	2.500	4.000	5.000
HMC+EMI[2]	3.100	3.100	4.600	5.600
HMC+EMI[2], UV400+Blue Cut[3]	4.100	4.100	5.600	6.600

Remark 1 HC Non-Tnt. means Non-tintable Hard-coated, pencil hardness up to 7H.

Remark 2 HMC+EMI including Hard + AR Multi-coating + Hydrophobic and Electro Magnetic Interference Blocking.
Super Hydrophobic is available with a surcharge of USD0.30/pair and min. quantity of each shipment is 3,000 pairs.

Remark 3 UV400+Blue Cut cuts off harmful ultraviolet light (UV) and absorbs high-energy blue light.

Semi-finished Lens - Single Vision

USD/Pair

Dia. (mm)	Curve		C. Thick. (mm)	Curve Radius (mm)		Price
	CVX(+)	CCV(-)		CVX(+)	CCV(-)	
70	0.00	6.00	6.0	0	87	5.500
70	2.00	6.00	6.0	262	87	5.500
70	4.00	6.00	6.0	131	87	5.500
70	6.00	6.00	6.0	87	87	5.500
70	8.00	4.00	10.0	65	131	5.800
70	10.00	4.00	12.0	52	131	5.800

- The edge thickness of minus specifications is available up to 20.0mm; the center thickness of plus specifications is available up to 20.0mm.
- The extra fee of adding each 1.0mm on thickness is USD1.00/pair.
- The extra fee for making Hard-coating (Non-tintable) on both sides is USD0.50/pair.
- The extra fee for making Hard-coating (Non-tintable) on both sides and AR Multi-coating + Hydrophobic + EMI coating on the convex (+) side is USD1.00/pair.
- The extra fee for making Hard-coating (Non-tintable) on both sides and AR Multicoating + Hydrophobic + EMI coating on the convex (+) side together with Blue Cut is USD3.00/pair.

Curve & Thickness

Sph.	Curve		C. Thick. (mm)
	CVX (+)	CCV (-)	
0.00	5.00	5.00	2.0
.25	4.75	5.00	1.8
.50	4.50	5.00	1.8
.75	4.25	5.00	1.8
-1.00	4.00	5.00	1.8
.25	3.75	5.00	1.8
.50	3.50	5.00	1.8
.75	3.25	5.00	1.8
-2.00	3.00	5.00	1.8
.25	2.75	5.00	1.8
.50	2.50	5.00	1.8
.75	2.25	5.00	1.8
-3.00	2.00	5.00	1.8
.25	2.75	6.00	1.8
.50	2.50	6.00	1.8
.75	2.25	6.00	1.8
-4.00	2.00	6.00	1.8
.25	1.75	6.00	1.8
.50	1.50	6.00	1.8
.75	2.25	7.00	1.8
-5.00	2.00	7.00	1.8
.25	1.75	7.00	1.8
.50	1.50	7.00	1.8
.75	1.25	7.00	1.8
-6.00	1.00	7.00	1.8

Sph.	Curve		E. Thick. (mm)
	CVX (+)	CCV (-)	
.25	4.25	4.00	1.8
.50	4.50	4.00	1.8
.75	4.75	4.00	1.5
+1.00	5.00	4.00	1.5
.25	5.25	4.00	1.5
.50	5.50	4.00	1.5
.75	5.75	4.00	1.5
+2.00	6.00	4.00	1.5
.25	6.25	4.00	1.5
.50	6.50	4.00	1.5
.75	6.75	4.00	1.5
+3.00	7.00	4.00	1.5
.25	6.25	3.00	1.1
.50	6.50	3.00	1.1
.75	6.75	3.00	1.1
+4.00	7.00	3.00	1.1
.25	7.25	3.00	1.1
.50	7.50	3.00	1.1
.75	7.75	3.00	1.1
+5.00	8.00	3.00	1.1
.25	7.25	2.00	1.1
.50	7.50	2.00	1.1
.75	7.75	2.00	1.1
+6.00	8.00	2.00	1.1

Available Power Range

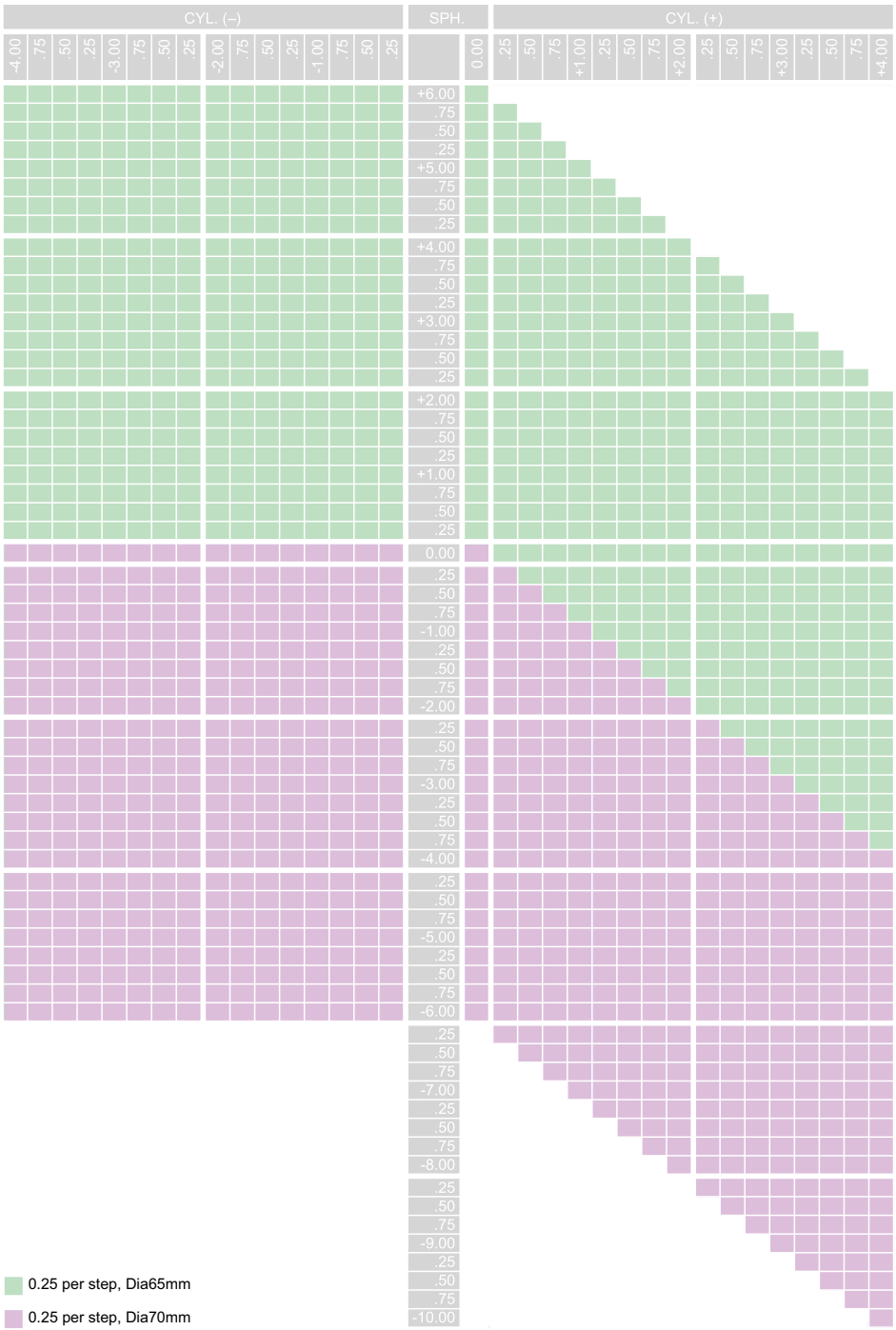

Photo 156/160

Photo 160 Minus Aspheric – Dia70mm (Grey)

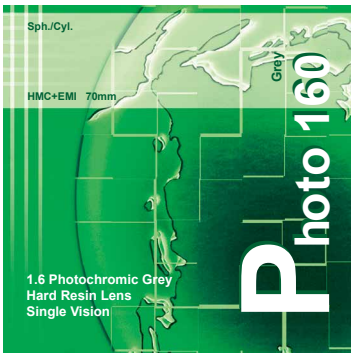

Price List

USD/Pair

	Sph.		Sph./Cyl.		
	-G2, -G4 & -G6	-G8 & -G10	-G2.2, -G4.2 & -G6.2	-G8.2 & -G10.2	-G2.4, -G4.4 & -G6.4
HMC+EMI[1]	7.500	7.500	7.500	7.500	9.000
HMC+EMI[1], UV400+Blue Cut[2]					

Remark 1 HMC+EMI including Hard + AR Multi-coating + Hydrophobic and Electro Magnetic Interference Blocking.
Super Hydrophobic is available with a surcharge of USD0.30/pair and min. quantity of each shipment is 3,000 pairs.

Remark 2 UV400+Blue Cut cuts off harmful ultraviolet light (UV) and absorbs high-energy blue light.

Semi-finished Lens - Single Vision

USD/Pair

Dia. (mm)	Curve		C. Thick. (mm)	Curve Radius (mm)		Price
	CVX(+)	CCV(-)		CVX(+)	CCV(-)	
70	0.00	6.00	6.0	0	87	8.500
70	2.00	6.00	6.0	262	87	8.500
70	4.00	6.00	6.0	131	87	8.500
70	6.00	6.00	6.0	87	87	8.500
70	8.00	4.00	10.0	65	131	9.000
70	10.00	4.00	12.0	52	131	9.000

- The edge thickness of minus specifications is available up to 20.0mm; the center thickness of plus specifications is available up to 20.0mm.
- The extra fee of adding each 1.0mm on thickness is USD1.00/pair.
- The extra fee for making Hard-coating (Non-tintable) on both sides is USD0.50/pair.
- The extra fee for making Hard-coating (Non-tintable) on both sides and AR Multi-coating + Hydrophobic + EMI coating on the convex (+) side is USD1.00/pair.
- The extra fee for making Hard-coating (Non-tintable) on both sides and AR Multicoating + Hydrophobic + EMI coating on the convex (+) side together with Blue Cut is USD3.00/pair.

Curve & Thickness

Sph.	Curve		C. Thick. (mm)
	CVX (+)	CCV (-)	
0.00	4.00	4.00	2.0
.25	3.75	4.00	2.0
.50	3.50	4.00	2.0
.75	3.25	4.00	2.0
-1.00	3.00	4.00	2.0
.25	3.25	4.50	1.8
.50	3.00	4.50	1.8
.75	2.75	4.50	1.8
-2.00	2.50	4.50	1.8
.25	2.75	5.00	1.6
.50	2.50	5.00	1.6
.75	2.25	5.00	1.6
-3.00	2.00	5.00	1.6
.25	2.25	5.50	1.4
.50	2.00	5.50	1.4
.75	1.75	5.50	1.4
-4.00	1.50	5.50	1.4
.25	1.75	6.00	1.2
.50	1.50	6.00	1.2
.75	1.25	6.00	1.2
-5.00	1.00	6.00	1.2
.25	1.25	6.50	1.0
.50	1.00	6.50	1.0
.75	0.75	6.50	1.0
-6.00	0.50	6.50	1.0
.25	1.25	7.50	1.0
.50	1.00	7.50	1.0
.75	0.75	7.50	1.0
-7.00	0.50	7.50	1.0
.25	1.25	8.50	1.0
.50	1.00	8.50	1.0
.75	0.75	8.50	1.0
-8.00	0.50	8.50	1.0
.25	1.25	9.50	1.0
.50	1.00	9.50	1.0
.75	0.75	9.50	1.0
-9.00	0.50	9.50	1.0
.25	1.25	10.50	1.0
.50	1.00	10.50	1.0
.75	0.75	10.50	1.0
-10.00	0.50	10.50	1.0
.25	1.25	11.50	0.8
.50	1.00	11.50	0.8
.75	0.75	11.50	0.8
-11.00	0.50	11.50	0.8
.25	1.25	12.50	0.8
.50	1.00	12.50	0.8
.75	0.75	12.50	0.8
-12.00	0.50	12.50	0.8

Available Power Range

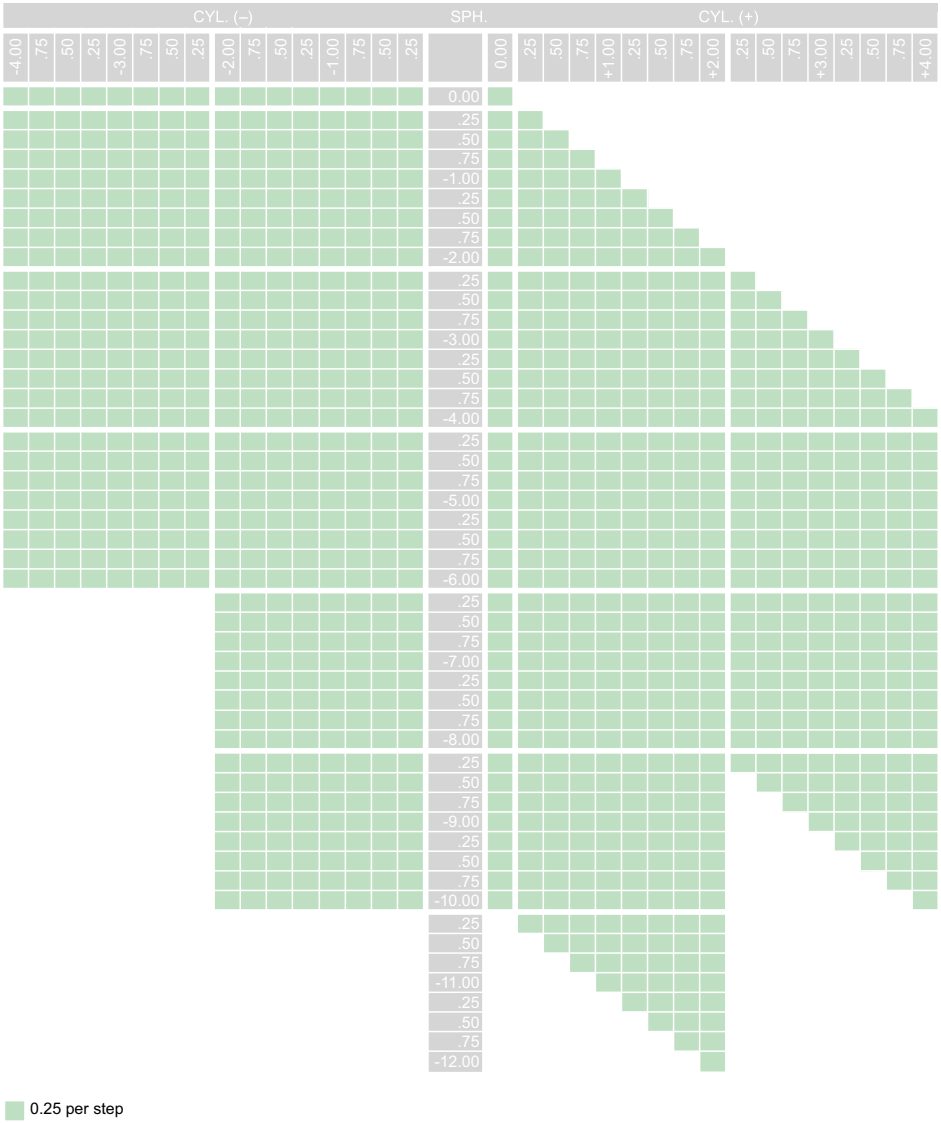

Photo 156/160

Photo 156 - Bifocal & Progressive (Grey & Brown)

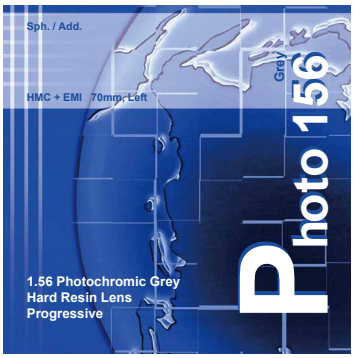

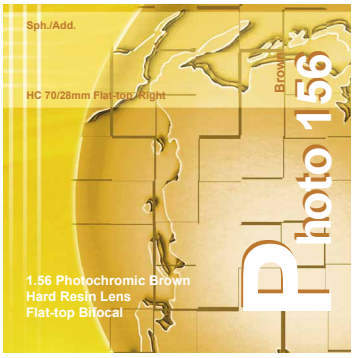

Price List

USD/Pair

	Round-shape Bifocal	Flat-top Bifocal	Progressive 12mm Short Corridor	Progressive 14mm Regular Corridor
Dia. (mm)	65mm, Seg. 28mm	70mm, Seg. 28mm	70mm	70mm
Nominal Base	5.00 Base	5.00 Base	4.00 Base	4.00 Base
True Base	5.00 Base	5.00 Base	3.50 Base	3.50 Base
Distance	-2.00 to +3.00	-2.00 to +3.00	-3.00 to +3.00	-3.00 to +3.00
Addition	+1.00 to +3.00	+1.00 to +3.00	+1.00 to +3.00	+1.00 to +3.00
HC Non-Tnt.[1]	3.000	3.750	4.500	4.500
HMC+EMI[2]	3.500	4.350	5.100	5.100
HMC+EMI[2], UV400+Blue Cut[3]	4.500	5.350	6.100	6.100

Remark 1 HC Non-Tnt. means Non-tintable Hard-coated, pencil hardness up to 7H.

Remark 2 HMC+EMI including Hard + AR Multi-coating + Hydrophobic and Electro Magnetic Interference Blocking.
Super Hydrophobic is available with a surcharge of USD0.30/pair and min. quantity of each shipment is 3,000 pairs.

Remark 3 UV400+Blue Cut cuts off harmful ultraviolet light (UV) and absorbs high-energy blue light.

Semi-finished Lens - Round-shape Bifocal

USD/Pair

Dia. (mm)	Curve CVX(+)	Curve CCV(-)	C. Thick. (mm)	Curve Radius (mm) CVX(+)	Curve Radius (mm) CCV(-)	Price
70	2.00	6.00	6.0	262	87	6.000
70	4.00	6.00	6.0	131	87	6.000
70	6.00	6.00	6.0	87	87	6.000
70	8.00	4.00	10.0	65	131	6.300

- Segment size 28mm, available Add. power +1.00 to +3.00.
- The edge thickness of minus specifications is available up to 20.0mm; the center thickness of plus specifications is available up to 20.0mm.
- The extra fee of adding each 1.0mm on thickness is USD1.00/pair.
- The extra fee for making Hard-coating (Non-tintable) on both sides is USD0.50/pair.
- The extra fee for making Hard-coating (Non-tintable) on both sides and AR Multicoating + Hydrophobic + EMI coating on the convex (+) side is USD1.00/pair.
- The extra fee for making Hard-coating (Non-tintable) on both sides and AR Multicoating + Hydrophobic + EMI coating on the convex (+) side together with Blue Cut is USD3.00/pair.

Semi-finished Lens - Flat-top Bifocal

USD/Pair

Dia. (mm)	Curve CVX(+)	Curve CCV(-)	C. Thick. (mm)	Curve Radius (mm) CVX(+)	Curve Radius (mm) CCV(-)	Price
70	2.00	6.00	6.0	262	87	6.500
70	4.00	6.00	6.0	131	87	6.500
70	6.00	6.00	6.0	87	87	6.500
70	8.00	4.00	10.0	65	131	6.800

- Segment size 28mm, available Add. power +1.00 to +3.00.
- The edge thickness of minus specifications is available up to 20.0mm; the center thickness of plus specifications is available up to 20.0mm.
- The extra fee of adding each 1.0mm on thickness is USD1.00/pair.
- The extra fee for making Hard-coating (Non-tintable) on both sides is USD0.50/pair.
- The extra fee for making Hard-coating (Non-tintable) on both sides and AR Multicoating + Hydrophobic + EMI coating on the convex (+) side is USD1.00/pair.
- The extra fee for making Hard-coating (Non-tintable) on both sides and AR Multicoating + Hydrophobic + EMI coating on the convex (+) side together with Blue Cut is USD3.00/pair.

Semi-finished Lens - Progressive 12mm Short Corridor

USD/Pair

Dia. (mm)	Curve CVX(+)	Curve CCV(-)	C. Thick. (mm)	Curve Radius (mm) CVX(+)	Curve Radius (mm) CCV(-)	Price
70	1.50	6.00	6.0	349	87	7.000
70	3.50	6.00	6.0	149	87	7.000
70	5.75	6.00	6.0	91	87	7.000

- Available Add. power +1.00 to +3.00.
- The edge thickness of minus specifications is available up to 12.0mm; the center thickness of thickness specifications is available up to 10.0mm.
- The extra fee of adding each 1.0mm on thickness is USD2.00/pair.
- The extra fee for making Hard-coating (Non-tintable) on both sides is USD0.50/pair.
- The extra fee for making Hard-coating (Non-tintable) on both sides and AR Multicoating + Hydrophobic + EMI coating on the convex (+) side is USD1.00/pair.
- The extra fee for making Hard-coating (Non-tintable) on both sides and AR Multicoating + Hydrophobic + EMI coating on the convex (+) side together with Blue Cut is USD3.00/pair.

Semi-finished Lens - Progressive 14mm Regular Corridor

USD/Pair

Dia. (mm)	Curve CVX(+)	Curve CCV(-)	C. Thick. (mm)	Curve Radius (mm) CVX(+)	Curve Radius (mm) CCV(-)	Price
70	1.50	6.00	6.0	349	87	7.000
70	3.50	6.00	6.0	149	87	7.000
70	5.75	6.00	6.0	91	87	7.000

- Available Add. power +1.00 to +3.00.
- The edge thickness of minus specifications is available up to 12.0mm; the center thickness of thickness specifications is available up to 10.0mm.
- The extra fee of adding each 1.0mm on thickness is USD2.00/pair.
- The extra fee for making Hard-coating (Non-tintable) on both sides is USD0.50/pair.
- The extra fee for making Hard-coating (Non-tintable) on both sides and AR Multicoating + Hydrophobic + EMI coating on the convex (+) side is USD1.00/pair.
- The extra fee for making Hard-coating (Non-tintable) on both sides and AR Multicoating + Hydrophobic + EMI coating on the convex (+) side together with Blue Cut is USD3.00/pair.

1.59 Polycarbonate Lenses



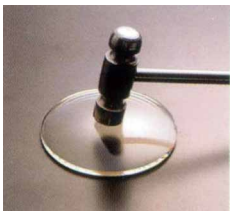

Polycarbonate Lens



Normal Lens

- Refraction index N_d=1.59.
- Abbe value 32.
- Density 1.20 g/cm^3.
- Impact-resistant is more than 10 times higher than CR-39 hard resin lenses.
- UV cut-off at 385nm, absorbing UV-ray and providing effective protection for the eyes.
- UV400 + Blue Cut is available.
- Super-hard protection coated.
- HMC+EMI coating available, Super Hydrophobic also available.

Slim 159 & Regular 159 - Dia65mm & Dia73mm

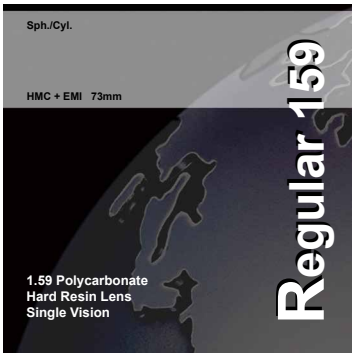

Price List

USD/Pair

	Sph.	
	±G2, ±G4 & ±G6	-G8
HC Non-Tnt.[1]	1.800	2.300
HMC+EMI[2]	2.300	2.800
HMC+EMI[2], UV400+Blue Cut[3]	3.300	3.800

	Sph./Cyl.			
	±G2.2, ±G4.2 & ±G6.2	-G8.2	±G2.4, ±G4.4 & ±G6.4	±G2.6, ±G4.6 & ±G6.6
HC Non-Tnt.[1]	1.800	2.300	3.500	6.000
HMC+EMI[2]	2.300	2.800	4.000	6.500
HMC+EMI[2], UV400+Blue Cut[3]	3.300	3.800	5.000	7.500

Remark 1 HC Non-Tnt. means Non-tintable Hard-coated, pencil hardness up to 7H.

Remark 2 HMC+EMI including Hard + AR Multi-coating + Hydrophobic and Electro Magnetic Interference Blocking.
Super Hydrophobic is available with a surcharge of USD0.30/pair and min. quantity of each shipment is 3,000 pairs.

Remark 3 UV400+Blue Cut cuts off harmful ultraviolet light (UV) and absorbs high-energy blue light.

Semi-finished Lens

USD/Pair

Dia. (mm)	Curve		C. Thick. (mm)	Curve Radius (mm)		Price
	CVX(+)	CCV(-)		CVX(+)	CCV(-)	
70	0.00	6.00	6.0	0	87	4.000
70	2.00	6.00	6.0	262	87	4.000
70	4.00	6.00	6.0	131	87	4.000
70	6.00	6.00	6.0	87	87	4.000
70	8.00	4.00	10.0	65	131	4.000
70	10.00	4.00	12.0	52	131	4.000

- The extra fee for making Hard-coating (Non-tintable) on both sides is USD0.50/pair.
- The extra fee for making Hard-coating (Non-tintable) on both sides and AR Multi-coating + Hydrophobic + EMI coating on the convex (+) side is USD1.00/pair.
- The extra fee for making Hard-coating (Non-tintable) on both sides and AR Multi-coating + Hydrophobic + EMI coating on the convex (+) side together with Blue Cut is USD2.00/pair.

Curve & Thickness

Sph.	Curve		C. Thick. (mm)
	CVX (+)	CCV (-)	
0.00	5.00	5.00	2.0
.25	5.00	5.25	2.0
.50	5.00	5.50	1.8
.75	5.00	5.75	1.8
-1.00	5.00	6.00	1.6
.25	5.00	6.25	1.6
.50	5.00	6.50	1.4
.75	5.00	6.75	1.4
-2.00	5.00	7.00	1.4
.25	3.00	5.25	1.4
.50	3.00	5.50	1.4
.75	3.00	5.75	1.4
-3.00	3.00	6.00	1.3
.25	3.00	6.25	1.3
.50	3.00	6.50	1.3
.75	3.00	6.75	1.3
-4.00	3.00	7.00	1.3
.25	1.00	5.25	1.3
.50	1.00	5.50	1.3
.75	1.00	5.75	1.3
-5.00	1.00	6.00	1.3
.25	1.00	6.25	1.3
.50	1.00	6.50	1.3
.75	1.00	6.75	1.3
-6.00	1.00	7.00	1.3
.25	1.25	7.50	1.1
.50	1.00	7.50	1.1
.75	0.75	7.50	1.1
-7.00	0.50	7.50	1.1
.25	0.75	8.00	1.1
.50	0.50	8.00	1.1
.75	0.75	8.50	1.1
-8.00	0.50	8.50	1.1

Sph.	Curve		E. Thick. (mm)
	CVX (+)	CCV (-)	
.25	3.25	3.00	1.9
.50	3.50	3.00	1.9
.75	3.75	3.00	1.8
+1.00	4.00	3.00	1.6
.25	4.25	3.00	1.6
.50	4.50	3.00	1.5
.75	4.75	3.00	1.5
+2.00	5.00	3.00	1.5
.25	4.25	2.00	1.4
.50	4.50	2.00	1.4
.75	4.75	2.00	1.4
+3.00	5.00	2.00	1.3
.25	5.25	2.00	1.2
.50	5.50	2.00	1.2
.75	5.75	2.00	1.2
+4.00	6.00	2.00	1.2
.25	5.25	1.00	1.1
.50	5.50	1.00	1.1
.75	5.75	1.00	1.1
+5.00	6.00	1.00	1.1
.25	6.25	1.00	1.0
.50	6.50	1.00	1.0
.75	6.75	1.00	1.0
+6.00	7.00	1.00	1.0

Available Power Range

0.25 per step, Dia65mm, UV400+Blue Cut is available

0.25 per step, Dia73mm, UV400+Blue Cut is available

Bifocal & Progressive 159 - Dia70mm

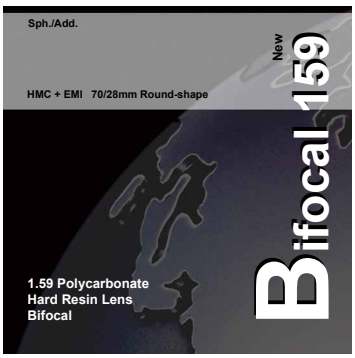

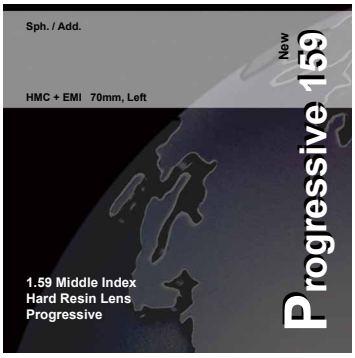

Price List

USD/Pair

	Round-shape Bifocal	Flat-top Bifocal	Progressive 13mm Short Corridor
Dia. (mm)	70mm, Seg. 28mm	70mm, Seg. 28mm	70mm
Distance	-2.00 to +3.00	-2.00 to +3.00	-2.00 to +3.00
Addition	+1.00 to +3.00	+1.00 to +3.00	+1.00 to +3.00
HC Non-Tnt.[1]	1.200	1.500	5.000
HMC+EMI[2]	1.700	2.000	5.500

Remark 1 HC Non-Tnt. means Non-tintable Hard-coated, pencil hardness up to 7H.

Remark 2 HMC+EMI including Hard + AR Multi-coating + Hydrophobic and Electro Magnetic Interference Blocking. Super Hydrophobic is available with a surcharge of USD0.30/pair and min. quantity of each shipment is 3,000 pairs.

Semi-finished Lens - Progressive 159

USD/Pair

Dia. (mm)	Curve		C. Thick. (mm)	Curve Radius (mm)		Price
	CVX(+)	CCV(-)		CVX(+)	CCV(-)	
70	4.00	6.00	6.0	131	87	9.500
70	6.00	6.00	6.0	87	87	9.500

- Segment size 28mm, available Add. power +1.00 to +3.00.
- The extra fee for making Hard-coating (Non-tintable) on both sides is USD0.50/pair.
- The extra fee for making Hard-coating (Non-tintable) on both sides and AR Multicoating + Hydrophobic + EMI coating on the convex (+) side is USD1.00/pair.

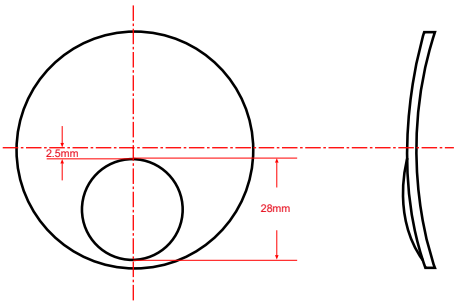

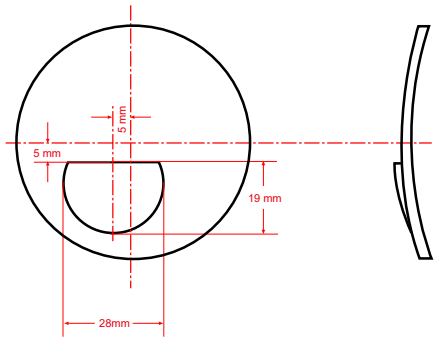

Available Power Range - Dia70mm

Distance Portion	Add. .75	+1.00	.25	.50	.75	+2.00	.25	.50	.75	+3.00	.25	.50	.75	+4.00
+3.00														
.75														
.50														
.25														
+2.00														
.75														
.50														
.25														
+1.00														
.75														
.50														
.25														
0.00														
.25														
.50														
.75														
-1.00														
.25														
.50														
.75														
-2.00														
.25														
.50														
.75														
-3.00														

0.25 per step

1.60/1.67 Hi-index Hard Resin Lenses



MR-7™ Watching the World Designed by Mitsui Chemicals

UV400

Aspheric

- Refraction index N_d=1.60 & N_d=1.67
- Abbe value 41 (N_d=1.60) & 31 (N_d=1.67)
- Density 1.28 g/cm^3 (N_d=1.60) & 1.35 g/cm^3 (N_d=1.67)
- Thinner and lighter than CR-39 1.5 lenses & 1.56 middle index lenses.
- High scratch resistance, super-hard protection coated.
- HMC+EMI coating available. Super Hydrophobic also available.
- UV cut-off at 400nm, absorbing UV-ray and providing effective protection to the eyes.
- UV400 + Blue Cut is available.

MR-7™ is a registered trademark of Mitsui Chemicals, Inc.

Regular 160 Minus Aspheric - Dia65mm, Dia70mm & Dia75mm, UV400



Price List

USD/Pair

	Sph.							
	-G2, -G4 & -G6	-G8	-G10	-G12[3]	-G14[3]	-G16[3]	-G18[3]	-G20[3]
HMC+EMI[1]	3.000	3.000	3.000	3.500	3.500	3.500	4.000	4.000
HMC+EMI[1], UV400+Blue Cut[2]	3.500	3.500	3.500					

	Sph./Cyl.							
	-G2.2, -G4.2 & -G6.2	-G8.2	-G10.2	-G12.2[3]	-G14.2[3]	-G16.2[3]	-G18.2[3]	-G20.2[3]
HMC+EMI[1]	3.000	3.000	3.000	4.000	4.0000	4.000	4.500	4.500
HMC+EMI[1], UV400+Blue Cut[2]	3.500	3.500	3.500					

	Sph./Cyl.							
	-G2.4, -G4.4 & -G6.4	-G8.4	-G10.4	-G12.4[3]	-G14.4[3]	-G16.4[3]	-G18.4[3]	-G20.4
HMC+EMI[1]	4.000	4.500	4.500	5.000	5.000	5.000	5.500	
HMC+EMI[1], UV400+Blue Cut[2]	4.500							

Remark 1 HMC+EMI including Hard + AR Multi-coating + Hydrophobic and Electro Magnetic Interference Blocking.
Super Hydrophobic is available with a surcharge of USD0.30/pair and min. quantity of each shipment is 3,000 pairs.

Remark 2 UV400+Blue Cut cuts off harmful ultraviolet light (UV) and absorbs high-energy blue light.

Remark 3 0.50 per step instead of 0.25.

Semi-finished Lens

USD/Pair

Dia. (mm)	Curve		C. Thick. (mm)	Curve Radius (mm)		Price
	CVX(+)	CCV(-)		CVX(+)	CCV(-)	
70	0.00	6.00	6.0	0	87	5.250
70	2.00	6.00	6.0	262	87	5.250
70	4.00	6.00	6.0	131	87	5.250
70	6.00	6.00	6.0	87	87	5.250
70	8.00	4.00	10.0	65	131	5.500
70	10.00	4.00	12.0	52	131	5.500

- The edge thickness of minus specifications is available up to 20.0mm; the center thickness of plus specifications is available up to 20.0mm;
- The extra fee of adding each 1.0mm on thickness is USD2.00/pair.
- The extra fee for making Hard-coating (Non-tintable) on both sides is USD0.50/pair.
- The extra fee for making Hard-coating (Non-tintable) on both sides and AR Multi-coating + Hydrophobic + EMI coating on the convex (+) side is USD1.00/pair.
- The extra fee for making Hard-coating (Non-tintable) on both sides and AR Multicoating + Hydrophobic + EMI coating on the convex (+) side together with Blue Cut is USD2.00/pair.

UV400 Aspheric

Curve & Thickness

Sph.	Curve		C. Thick. (mm)
	CVX (+)	CCV (-)	
0.00	4.00	4.00	2.0
.25	3.75	4.00	2.0
.50	3.50	4.00	2.0
.75	3.25	4.00	2.0
-1.00	3.00	4.00	2.0
.25	3.25	4.50	1.8
.50	3.00	4.50	1.8
.75	2.75	4.50	1.8
-2.00	2.50	4.50	1.8
.25	2.75	5.00	1.6
.50	2.50	5.00	1.6
.75	2.25	5.00	1.6
-3.00	2.00	5.00	1.6
.25	2.25	5.50	1.4
.50	2.00	5.50	1.4
.75	1.75	5.50	1.4
-4.00	1.50	5.50	1.4
.25	1.75	6.00	1.2
.50	1.50	6.00	1.2
.75	1.25	6.00	1.2
-5.00	1.00	6.00	1.2
.25	1.25	6.50	1.0
.50	1.00	6.50	1.0
.75	0.75	6.50	1.0
-6.00	0.50	6.50	1.0
.25	1.25	7.50	1.0
.50	1.00	7.50	1.0
.75	0.75	7.50	1.0
-7.00	0.50	7.50	1.0
.25	1.25	8.50	1.0
.50	1.00	8.50	1.0
.75	0.75	8.50	1.0
-8.00	0.50	8.50	1.0
.25	1.25	9.50	1.0
.50	1.00	9.50	1.0
.75	0.75	9.50	1.0
-9.00	0.50	9.50	1.0

Sph.	Curve		C. Thick. (mm)
	CVX (+)	CCV (-)	
-9.25	1.25	10.50	1.0
.50	1.00	10.50	1.0
.75	0.75	10.50	1.0
-10.00	0.50	10.50	1.0
.25	1.25	11.50	0.8
.50	1.00	11.50	0.8
.75	0.75	11.50	0.8
-11.00	0.50	11.50	0.8
.25	1.25	12.50	0.8
.50	1.00	12.50	0.8
.75	0.75	12.50	0.8
-12.00	0.50	12.50	0.8
.25	1.25	13.50	0.8
.50	1.00	13.50	0.8
.75	0.75	13.50	0.8
-13.00	0.50	13.50	0.8
.25	1.25	14.50	0.8
.50	1.00	14.50	0.8
.75	0.75	14.50	0.8
-14.00	0.50	14.50	0.8
.25	1.25	15.50	0.8
.50	1.00	15.50	0.8
.75	0.75	15.50	0.8
-15.00	0.50	15.50	0.8
.25	1.25	16.50	0.8
.50	1.00	16.50	0.8
.75	0.75	16.50	0.8
-16.00	0.50	16.50	0.8
.50	1.00	17.50	0.8
-17.00	0.50	17.50	0.8
.50	1.00	18.50	0.8
-18.00	0.50	18.50	0.8
.50	1.00	19.50	0.8
-19.00	0.50	19.50	0.8
.50	1.00	20.50	0.8
-20.00	0.50	20.50	0.8

Available Power Range

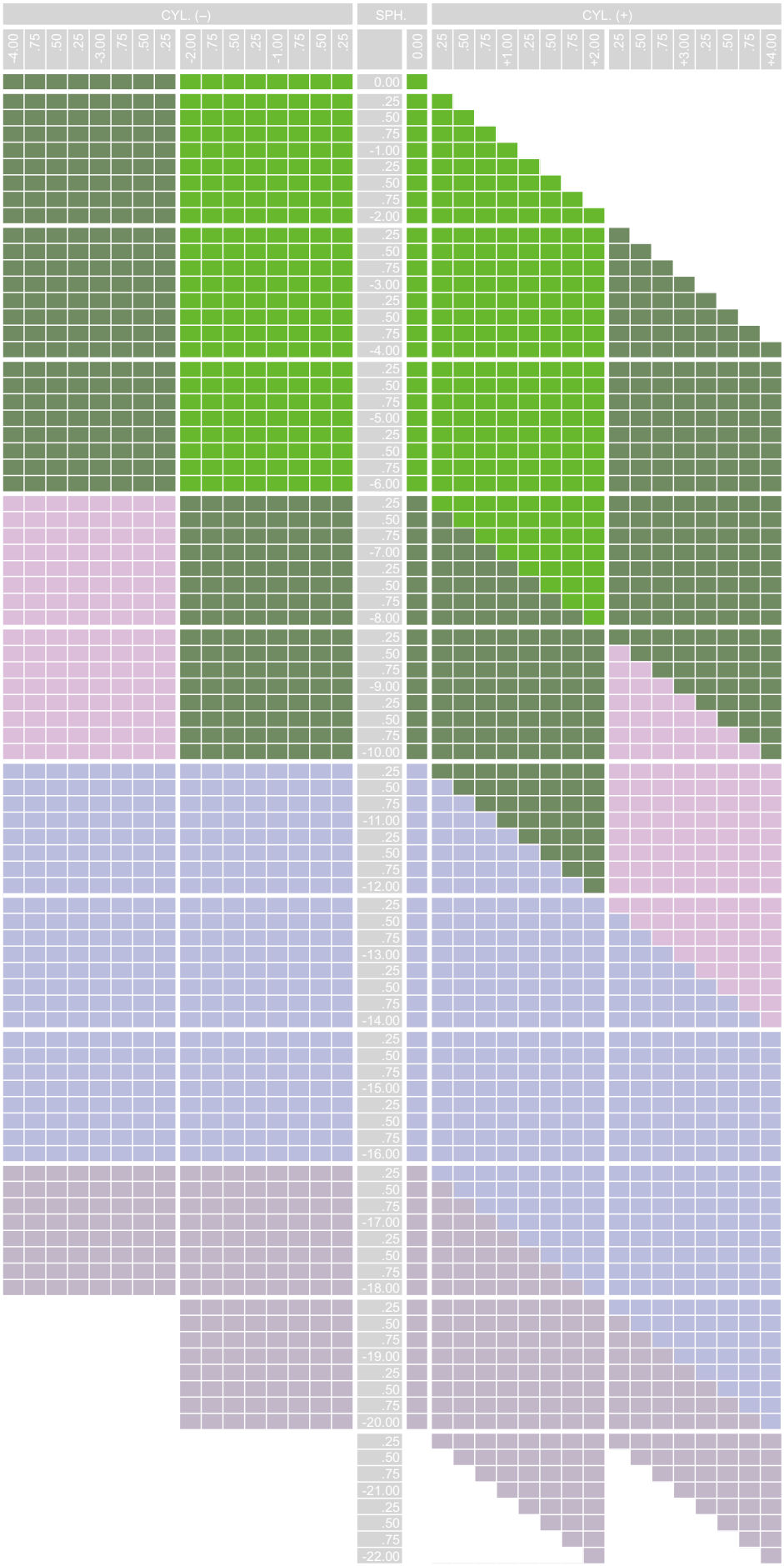

- 0.25 per step, Dia75mm, aspheric design
  UV400+Blue Cut is available
- 0.25 per step, Dia70mm, aspheric design
  UV400+Blue Cut is available
- 0.25 per step, Dia70mm, aspheric design
- 0.25 per step, Dia65mm, aspheric design
- 0.50 per step, Dia65mm, aspheric design

Slim 160 Plus Aspheric - Dia65mm, UV400



Price List

USD/Pair

	Sph.		Sph./Cyl.	
	+G2, +G4 & +G6	+G8[3]	+G2.2, +G4.2 & +G6.2	+G2.4 & +G4.4
HMC+EMI[1]	4.000	4.000	4.000	4.500
HMC+EMI[1], UV400+Blue Cut[2]	5.000		5.000	5.500

Remark 1 HMC+EMI including Hard + AR Multi-coating + Hydrophobic and Electro Magnetic Interference Blocking.
Super Hydrophobic is available with a surcharge of USD0.30/pair and min. quantity of each shipment is 3,000 pairs.

Remark 2 UV400+Blue Cut cuts off harmful ultraviolet light (UV) and absorbs high-energy blue light.

Remark 3 0.50 per step instead of 0.25.

Available Power Range

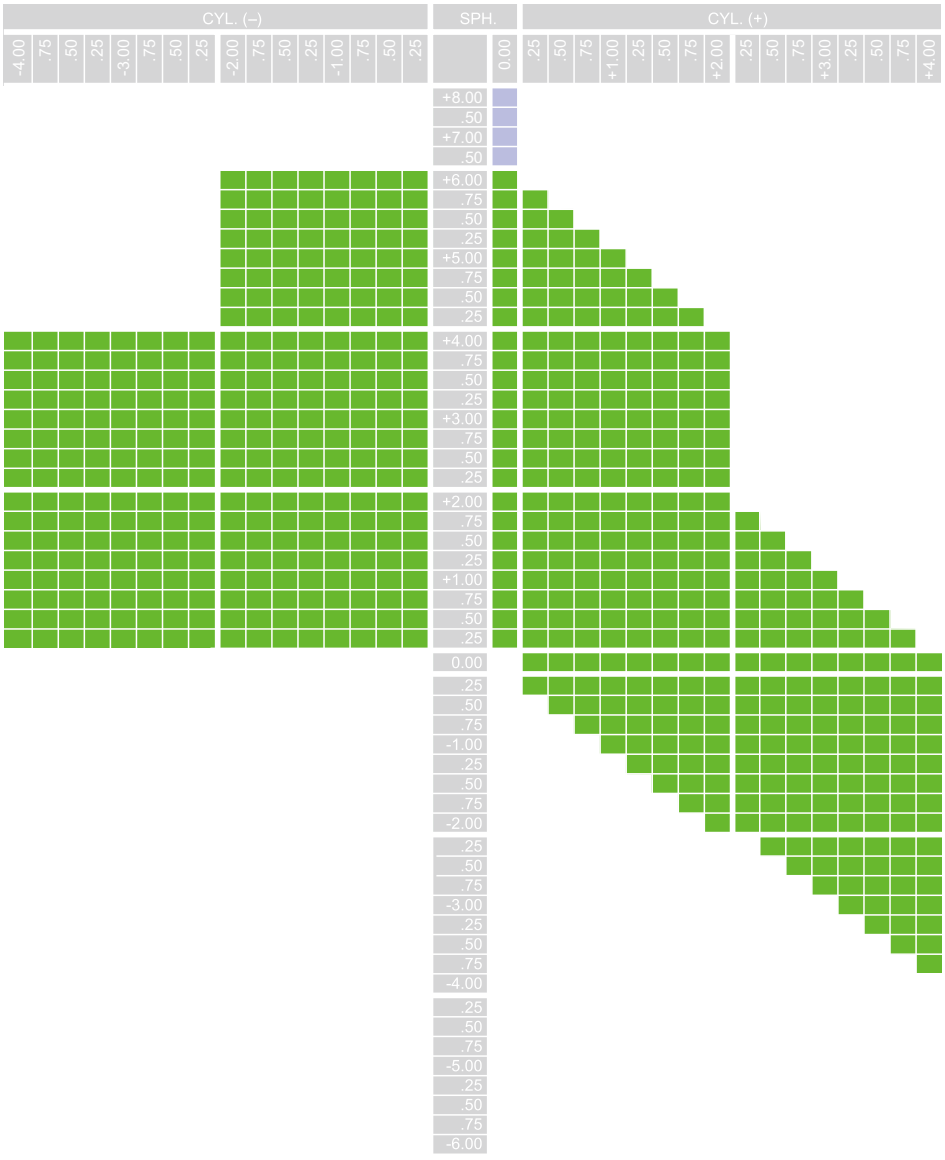

0.25 per step, UV400+Blue Cut is available

0.50 per step

Curve & Thickness

Sph.	Curve		E. Thick. (mm)
	CVX (+)	CCV (-)	
.25	4.25	4.00	1.8
.50	4.50	4.00	1.8
.75	4.75	4.00	1.8
+1.00	5.00	4.00	1.8
.25	5.25	4.00	1.5
.50	5.50	4.00	1.5
.75	5.75	4.00	1.5
+2.00	6.00	4.00	1.5
.25	5.25	3.00	1.5
.50	5.50	3.00	1.5
.75	5.75	3.00	1.5
+3.00	6.00	3.00	1.5
.25	6.25	3.00	1.5
.50	6.50	3.00	1.5
.75	6.75	3.00	1.5
+4.00	7.00	3.00	1.5
.25	6.25	2.00	1.2
.50	6.50	2.00	1.2
.75	6.75	2.00	1.2
+5.00	7.00	2.00	1.2
.25	7.25	2.00	1.2
.50	7.50	2.00	1.2
.75	7.75	2.00	1.2
+6.00	8.00	2.00	1.2
.50	7.50	1.00	1.1
+7.00	8.00	1.00	1.1
.50	8.50	1.00	1.1
+8.00	9.00	1.00	1.1

UV400 Aspheric

Slim 167 Plus Aspheric - Dia65mm, UV400



Price List

USD/Pair

	Sph.		Sph./Cyl.
	+G2, +G4 & +G6	+G8[2]	+G2.2, +G4.2 & +G6.2
SHMC+EMI[1]	7.500	8.500	7.500

Remark 1 SHMC+EMI including Hard + AR Multi-coating + Super Hydrophobic and Electro Magnetic Interference Blocking.

Remark 2 0.50 per step instead of 0.25.

Available Power Range

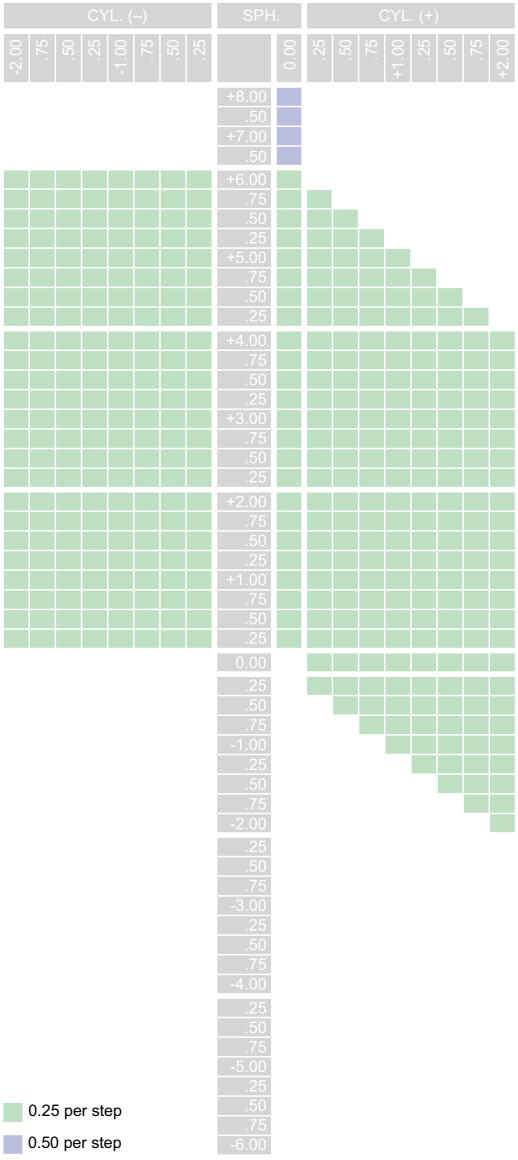

Curve & Thickness

Sph.	Curve		E. Thick. (mm)
	CVX (+)	CCV (-)	
.25	4.25	4.00	1.8
.50	4.50	4.00	1.8
.75	4.75	4.00	1.8
+1.00	5.00	4.00	1.8
.25	5.25	4.00	1.5
.50	5.50	4.00	1.5
.75	5.75	4.00	1.5
+2.00	6.00	4.00	1.5
.25	5.25	3.00	1.5
.50	5.50	3.00	1.5
.75	5.75	3.00	1.5
+3.00	6.00	3.00	1.5
.25	6.25	3.00	1.5
.50	6.50	3.00	1.5
.75	6.75	3.00	1.5
+4.00	7.00	3.00	1.5
.25	6.25	2.00	1.2
.50	6.50	2.00	1.2
.75	6.75	2.00	1.2
+5.00	7.00	2.00	1.2
.25	7.25	2.00	1.2
.50	7.50	2.00	1.2
.75	7.75	2.00	1.2
+6.00	8.00	2.00	1.2
.50	7.50	1.00	1.1
+7.00	8.00	1.00	1.1
.50	8.50	1.00	1.1
+8.00	9.00	1.00	1.1

MR-7™ Watching the World Designed by Mitsui Chemicals

UV400

Aspheric

- Made from MR-7™ monomer.
- MR-7™ is a registered trademark of Mitsui Chemicals, Inc.

Regular 167 Minus Aspheric - Dia65mm, Dia70mm & Dia75mm, UV400



Price List

USD/Pair

	Sph.									
	-G2	-G4	-G6	-G8	-G10	-G12[2]	-G14[2]	-G16[2]	-G18[2]	-G20[2]
SHMC+EMI[1]	7.000	7.000	7.000	7.000	7.500	7.500	10.000	10.000	19.000	19.000

	Sph./Cyl.									
	-G2.2	-G4.2	-G6.2	-G8.2	-G10.2	-G12.2[2]	-G14.2[2]	-G16.2[2]	-G18.2[2]	-G20.2[2]
SHMC+EMI[1]	7.000	7.000	7.000	7.000	8.500	8.500	11.000	11.000	20.000	20.000

	Sph./Cyl.									
	-G2.4	-G4.4	-G6.4	-G8.4	-G10.4	-G12.4[2]	-G14.4[2]	-G16.4[2]	-G18.4[2]	-G20.4
SHMC+EMI[1]	11.000	11.000	11.000	11.000	11.500	11.500	19.000	19.000	21.000	

Remark 1 SHMC+EMI including Hard + AR Multi-coating + Super Hydrophobic and Electro Magnetic Interference Blocking.

Remark 2 0.50 per step instead of 0.25.

Semi-finished Lens

USD/Pair

Dia. (mm)	Curve		C. Thick. (mm)	Curve Radius (mm)		Price
	CVX(+)	CCV(-)		CVX(+)	CCV(-)	
70	0.00	6.00	6.0	0	87	12.500
70	2.00	6.00	6.0	262	87	12.500
70	4.00	6.00	6.0	131	87	12.500
70	6.00	6.00	6.0	87	87	12.500
70	8.00	4.00	10.0	65	131	13.000
70	10.00	4.00	12.0	52	131	13.000

- The edge thickness of minus specifications is available up to 20.0mm; the center thickness of plus specifications is available up to 20.0mm;
- The extra fee of adding each 1.0mm on thickness is USD3.00/pair.
- The extra fee for making Hard-coating (Non-tintable) on both sides is USD0.50/pair.
- The extra fee for making Hard-coating (Non-tintable) on both sides and AR Multi-coating + Hydrophobic + EMI coating on the convex (+) side is USD1.00/pair.

MR-7™ Watching the World Designed by Mitsui Chemicals

UV400

Aspheric

- Made from MR-7™ monomer.
- MR-7™ is a registered trademark of Mitsui Chemicals, Inc.

Available Power Range

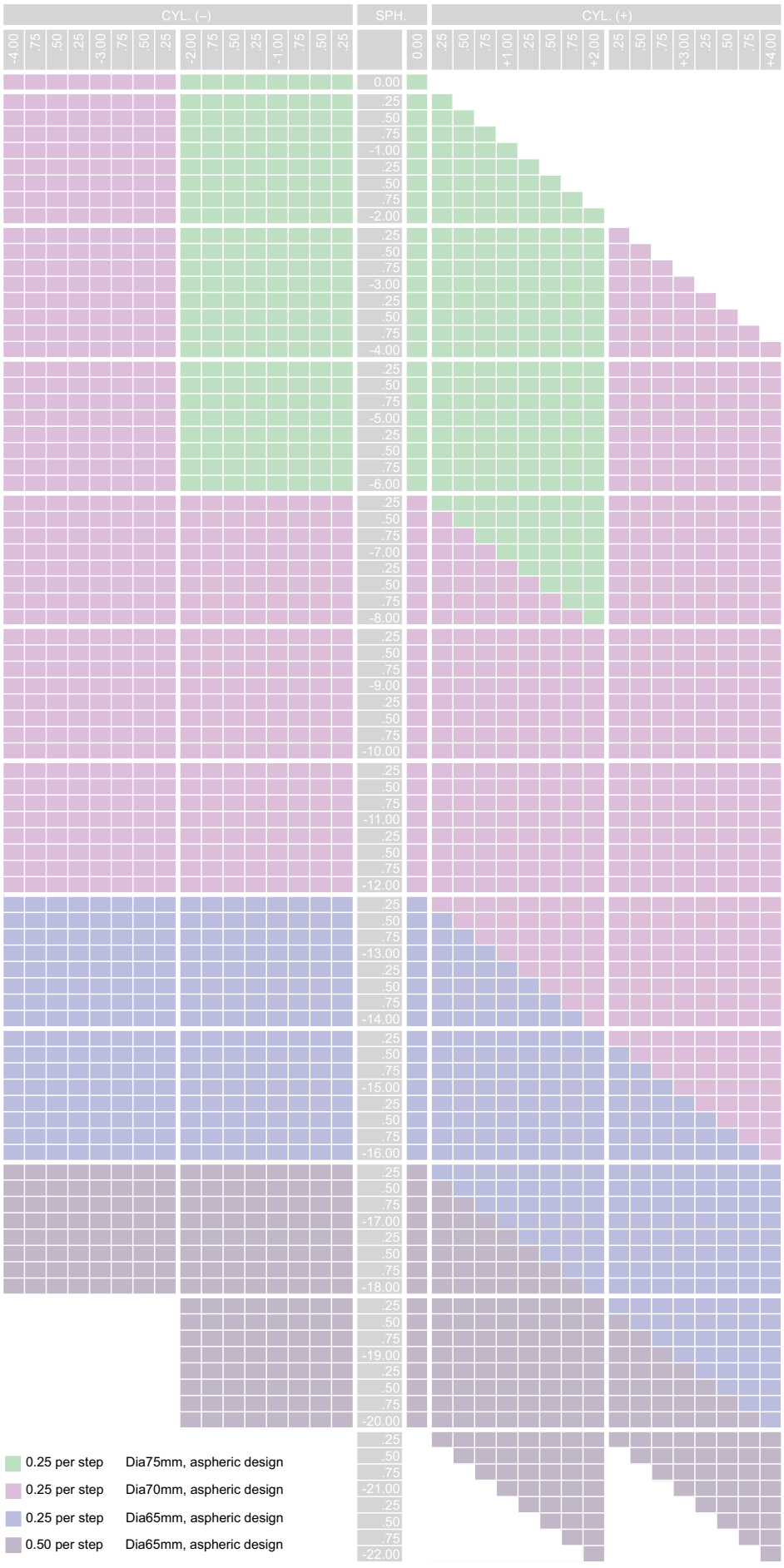

Curve & Thickness

Sph.	Curve		C. Thick. (mm)
	CVX (+)	CCV (-)	
0.00	4.00	4.00	2.0
.25	3.75	4.00	2.0
.50	3.50	4.00	2.0
.75	3.25	4.00	2.0
-1.00	3.00	4.00	2.0
.25	3.25	4.50	1.8
.50	3.00	4.50	1.8
.75	2.75	4.50	1.8
-2.00	2.50	4.50	1.8
.25	2.75	5.00	1.6
.50	2.50	5.00	1.6
.75	2.25	5.00	1.6
-3.00	2.00	5.00	1.6
.25	2.25	5.50	1.4
.50	2.00	5.50	1.4
.75	1.75	5.50	1.4
-4.00	1.50	5.50	1.4
.25	1.75	6.00	1.2
.50	1.50	6.00	1.2
.75	1.25	6.00	1.2
-5.00	1.00	6.00	1.2
.25	1.25	6.50	1.0
.50	1.00	6.50	1.0
.75	0.75	6.50	1.0
-6.00	0.50	6.50	1.0
.25	1.25	7.50	1.0
.50	1.00	7.50	1.0
.75	0.75	7.50	1.0
-7.00	0.50	7.50	1.0
.25	1.25	8.50	1.0
.50	1.00	8.50	1.0
.75	0.75	8.50	1.0
-8.00	0.50	8.50	1.0
.25	1.25	9.50	1.0
.50	1.00	9.50	1.0
.75	0.75	9.50	1.0
-9.00	0.50	9.50	1.0
.25	1.25	10.50	1.0
.50	1.00	10.50	1.0
.75	0.75	10.50	1.0
-10.00	0.50	10.50	1.0
.25	1.25	11.50	0.8
.50	1.00	11.50	0.8
.75	0.75	11.50	0.8
-11.00	0.50	11.50	0.8
.25	1.25	12.50	0.8
.50	1.00	12.50	0.8
.75	0.75	12.50	0.8
-12.00	0.50	12.50	0.8
.25	1.25	13.50	0.8
.50	1.00	13.50	0.8
.75	0.75	13.50	0.8
-13.00	0.50	13.50	0.8
.25	1.25	14.50	0.8
.50	1.00	14.50	0.8
.75	0.75	14.50	0.8
-14.00	0.50	14.50	0.8
.25	1.25	15.50	0.8
.50	1.00	15.50	0.8
.75	0.75	15.50	0.8
-15.00	0.50	15.50	0.8
.25	1.25	16.50	0.8
.50	1.00	16.50	0.8
.75	0.75	16.50	0.8
-16.00	0.50	16.50	0.8
.50	1.00	17.50	0.8
-17.00	0.50	17.50	0.8
.50	1.00	18.50	0.8
-18.00	0.50	18.50	0.8
.50	1.00	19.50	0.8
-19.00	0.50	19.50	0.8
.50	1.00	20.50	0.8
-20.00	0.50	20.50	0.8

Mineral White 1.523 Ophthalmic Lenses

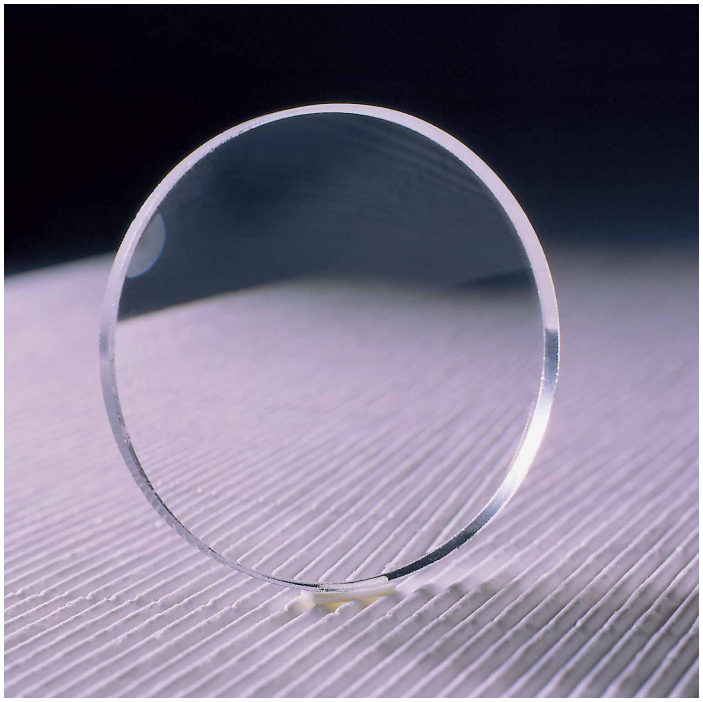

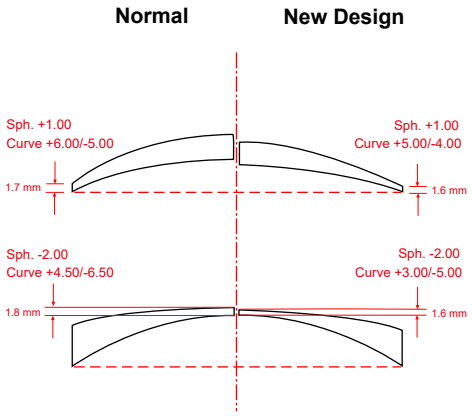

- Refraction index N_d=1.523.
- Abbe value 58.
- Density 2.53 g/cm^3.
- Newly designed products, slim and thin.
- AR and AR+EMI coatings are available in greenish and bluish colors.
- Absorbing UV-ray and providing effective protection for the eyes.

Slim Crown - Dia60mm

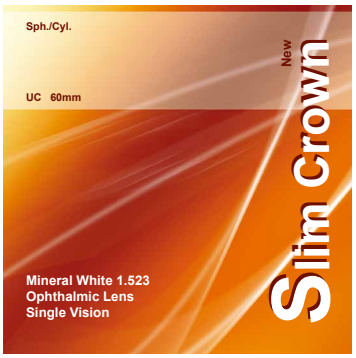

Price List

USD/Pair

	Sph.					Sph./Cyl.					
	±G2	±G4	±G6	-G8	-G10	±G2.2	±G4.2	±G6.2	±G2.4	±G4.4	±G6.4
Un-coated	0.700	0.730	0.790			1.140	1.290	1.570	2.150	2.430	2.720
AR[1]	1.270	1.300	1.370			1.720	1.860	2.150	2.720	3.000	3.290
AR+EMI[2]	1.420	1.440	1.510			1.860	2.000	2.290	2.860	3.150	3.430

Remark 1 AR means Anti-reflection Multi-coating.

Remark 2 AR+EMI including AR Multi-coating and Electro Magnetic Interference Blocking.

Available Power Range

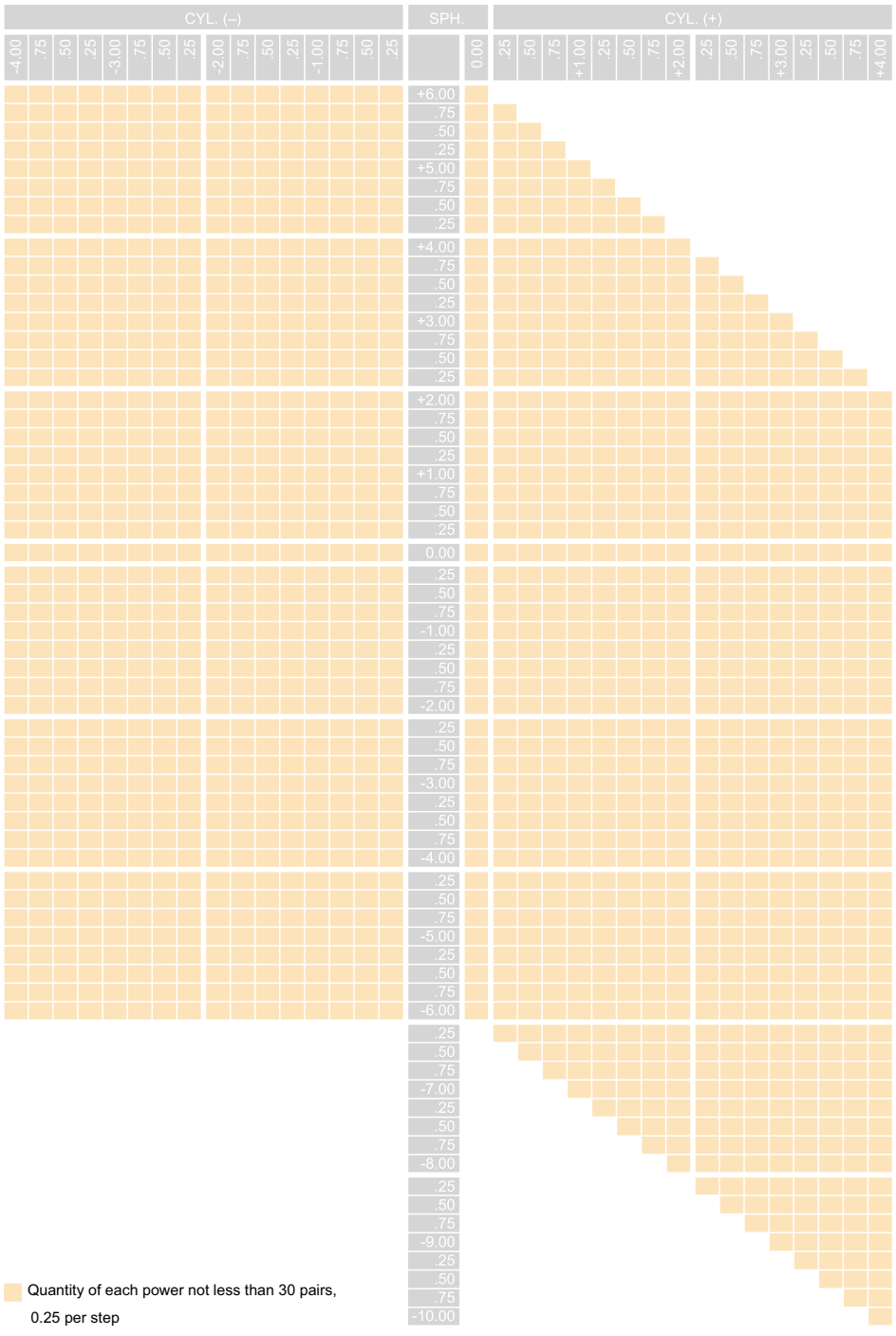

Quantity of each power not less than 30 pairs, 0.25 per step

Curve & Thickness

Sph.	Curve		C. Thick. (mm)
	CVX (+)	CCV (-)	
0.00	5.00	5.00	1.8
.25	4.75	5.00	1.6
.50	4.50	5.00	1.6
.75	4.25	5.00	1.6
-1.00	4.00	5.00	1.6
.25	3.75	5.00	1.6
.50	3.50	5.00	1.6
.75	3.25	5.00	1.6
-2.00	3.00	5.00	1.6
.25	3.75	6.00	1.2
.50	3.50	6.00	1.2
.75	3.25	6.00	1.2
-3.00	3.00	6.00	1.2
.25	2.75	6.00	1.2
.50	2.50	6.00	1.2
.75	2.25	6.00	1.2
-4.00	2.00	6.00	1.2
.25	2.75	7.00	1.0
.50	2.50	7.00	1.0
.75	2.25	7.00	1.0
-5.00	2.00	7.00	1.0
.25	1.75	7.00	1.0
.50	1.50	7.00	1.0
.75	1.25	7.00	1.0
-6.00	1.00	7.00	1.0

Sph.	Curve		E. Thick. (mm)
	CVX (+)	CCV (-)	
.25	4.25	4.00	1.6
.50	4.50	4.00	1.6
.75	4.75	4.00	1.6
+1.00	5.00	4.00	1.6
.25	5.25	4.00	1.6
.50	5.50	4.00	1.6
.75	5.75	4.00	1.6
+2.00	6.00	4.00	1.6
.25	5.25	3.00	1.2
.50	5.50	3.00	1.2
.75	5.75	3.00	1.2
+3.00	6.00	3.00	1.2
.25	6.25	3.00	1.2
.50	6.50	3.00	1.2
.75	6.75	3.00	1.2
+4.00	7.00	3.00	1.2
.25	6.25	2.00	1.0
.50	6.50	2.00	1.0
.75	6.75	2.00	1.0
+5.00	7.00	2.00	1.0
.25	7.25	2.00	1.0
.50	7.50	2.00	1.0
.75	7.75	2.00	1.0
+6.00	8.00	2.00	1.0

Regular Crown - Dia65mm

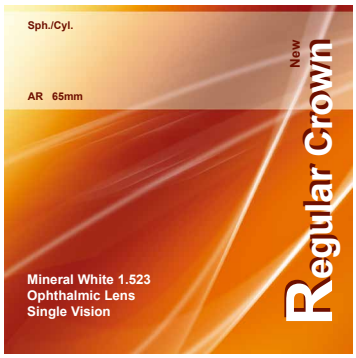

Price List

USD/Pair

	Sph.					Sph./Cyl.					
	±G2	±G4	±G6	-G8	-G10	±G2.2	±G4.2	±G6.2	±G2.4	±G4.4	±G6.4
Un-coated	0.730	0.810	0.940			1.220	1.370	1.650	2.290	2.570	
AR[1]	1.300	1.380	1.510			1.790	1.940	2.220	2.860	3.150	
AR+EMI[2]	1.440	1.520	1.650			1.940	2.080	2.370	3.000	3.290	

Remark 1 AR means Anti-reflection Multi-coating.

Remark 2 AR+EMI including AR Multi-coating and Electro Magnetic Interference Blocking.

Semi-finished Lens

USD/Pair

Dia. (mm)	Curve		C. Thick. (mm)	Curve Radius (mm)		Price
	CVX(+)	CCV(-)		CVX(+)	CCV(-)	
65	0.00	6.00	6.0	0	87	1.370
65	2.00	6.00	6.0	262	87	1.220
65	4.00	6.00	6.0	131	87	1.080
65	6.00	6.00	6.0	87	87	0.940
65	8.00	6.00	8.0	65	87	1.370
65	10.00	6.00	10.0	52	87	1.790

- Available thickness: 6.0mm - 12.0mm.
- The extra fee of adding each 1.0mm on thickness is USD0.10/pair.
- The extra fee for making AR Multi-coating on the convex (+) side is USD0.50/pair.

Curve & Thickness

Sph.	Curve		C. Thick. (mm)
	CVX (+)	CCV (-)	
0.00	5.00	5.00	1.8
.25	4.75	5.00	1.6
.50	4.50	5.00	1.6
.75	4.25	5.00	1.6
-1.00	4.00	5.00	1.6
.25	3.75	5.00	1.6
.50	3.50	5.00	1.6
.75	3.25	5.00	1.6
-2.00	3.00	5.00	1.6
.25	3.75	6.00	1.2
.50	3.50	6.00	1.2
.75	3.25	6.00	1.2
-3.00	3.00	6.00	1.2
.25	2.75	6.00	1.2
.50	2.50	6.00	1.2
.75	2.25	6.00	1.2
-4.00	2.00	6.00	1.2
.25	2.75	7.00	1.0
.50	2.50	7.00	1.0
.75	2.25	7.00	1.0
-5.00	2.00	7.00	1.0
.25	1.75	7.00	1.0
.50	1.50	7.00	1.0
.75	1.25	7.00	1.0
-6.00	1.00	7.00	1.0

Sph.	Curve		E. Thick. (mm)
	CVX (+)	CCV (-)	
.25	4.25	4.00	1.6
.50	4.50	4.00	1.6
.75	4.75	4.00	1.6
+1.00	5.00	4.00	1.6
.25	5.25	4.00	1.6
.50	5.50	4.00	1.6
.75	5.75	4.00	1.6
+2.00	6.00	4.00	1.6
.25	5.25	3.00	1.2
.50	5.50	3.00	1.2
.75	5.75	3.00	1.2
+3.00	6.00	3.00	1.2
.25	6.25	3.00	1.2
.50	6.50	3.00	1.2
.75	6.75	3.00	1.2
+4.00	7.00	3.00	1.2
.25	6.25	2.00	1.0
.50	6.50	2.00	1.0
.75	6.75	2.00	1.0
+5.00	7.00	2.00	1.0
.25	7.25	2.00	1.0
.50	7.50	2.00	1.0
.75	7.75	2.00	1.0
+6.00	8.00	2.00	1.0

Available Power Range

0.25 per step

Quantity of each power not less than 30 pairs, 0.25 per step

Bifocal Crown - Dia65mm

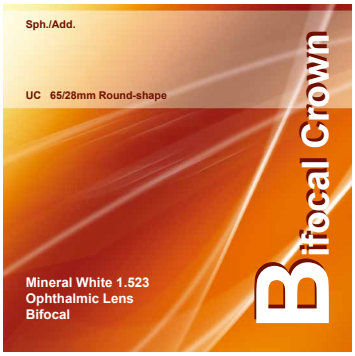

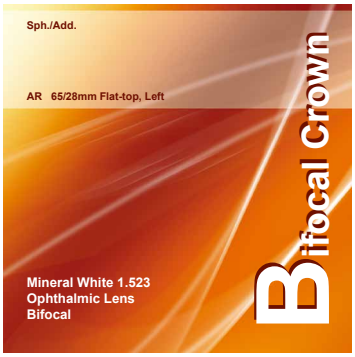

Price List

USD/Pair

Base 6.00	Round-shape 65mm, Seg. 28mm		Flat-top 65mm, Seg.28mm	
	Plano / Power	Power / Power	Plano / Power	Power / Power
Un-coated	2.290	2.430	4.290	4.580
AR[1]	2.860	3.000	4.860	5.150
AR+EMI[2]	3.000	3.150	5.010	5.290

Remark 1 AR means Anti-reflection Multi-coating.

Remark 2 AR+EMI including AR Multi-coating and Electro Magnetic Interference Blocking.

Available Power Range

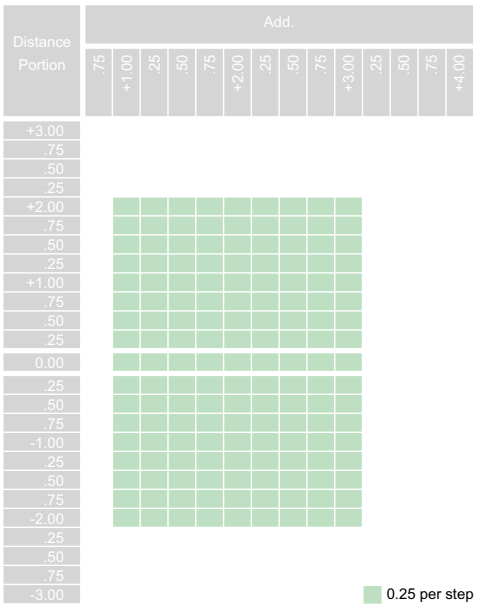

Semi-finished Lens - Round-shape Bifocal

USD/Pair

Dia. (mm)	Curve		C. Thick. (mm)	Curve Radius (mm)		Price
	CVX(+)	CCV(-)		CVX(+)	CCV(-)	
65	4.00	6.00	5.0	131	87	2.430
65	6.00	6.00	6.0	87	87	2.430

- Available thickness: 4.0mm - 8.0mm.
- The extra fee of adding each 1.0mm on thickness is USD0.10/pair.
- The extra fee for making AR Multi-coating on the convex (+) side is USD0.50/pair.

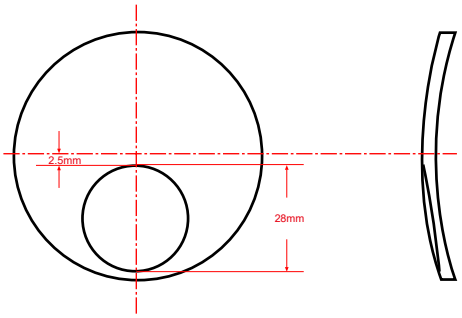

Semi-finished Lens - Flat-top Bifocal

USD/Pair

Dia. (mm)	Curve		C. Thick. (mm)	Curve Radius (mm)		Price
	CVX(+)	CCV(-)		CVX(+)	CCV(-)	
65	4.00	6.00	5.0	131	87	4.430
65	6.00	6.00	6.0	87	87	4.430

- Available thickness: 4.0mm - 8.0mm.
- The extra fee of adding each 1.0mm on thickness is USD0.15/pair.
- The extra fee for making AR Multi-coating on the convex (+) side is USD0.50/pair.

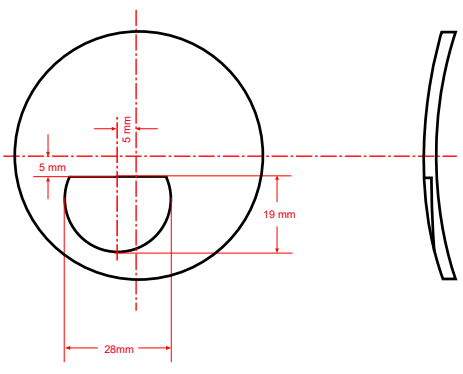

White Crown

Mineral 1.7/1.8/1.9 Hi-index Lenses



Refraction Index (N_d)	Abbe Value	Density (g/cm^3)	Colors
1.7	35	3.10	White, Pink, Brown
1.8	35	3.65	White, Pink
1.9	31	4.10	White

- Lighter, slimmer, and better looking, particularly suitable for high power lenses.
- AR multi-coating and AR+EMI coatings are available in greenish and bluish colors.
- Absorbing UV-ray and providing effective protection for the eyes.

Pro 170 Minus - Dia65mm (White, Pink & Brown)

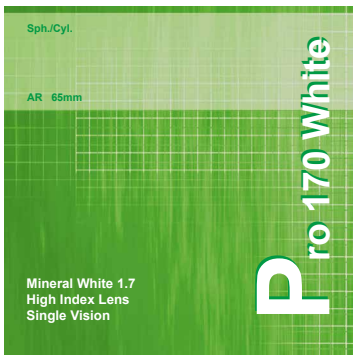





Price List

USD/Pair

	Sph.					Sph. Aspheric					
	-G4	-G6	-G8	-G10[3]	-G12[3]	-G14[3]	-G16[3]	-G18[4]	-G20[4]	-G22[5]	-G24[5]
Un-coated	1.790	2.000	2.220	2.430	2.800	3.290	4.290	4.580	4.860	5.580	6.290
AR[1]	2.370	2.570	2.800	3.000	3.370	3.860	4.860	5.150	5.430	6.150	6.860
AR+EMI[2]	2.510	2.720	2.940	3.150	3.510	4.000	5.010	5.290	5.580	6.290	7.010

	Sph./Cyl.								
	-G4.2	-G6.2	-G8.2	-G10.2[3]	-G12.2[3]	-G4.4[6]	-G6.4[6]	-G8.4[6]	-G10.4[7]
Un-coated	2.720	3.000	3.430	4.000	4.430	3.580	4.000	4.430	5.010
AR[1]	3.290	3.580	4.000	4.580	5.010	4.150	4.580	5.010	5.580
AR+EMI[2]	3.430	3.720	4.150	4.720	5.150	4.290	4.720	5.150	5.720

Remark 1 AR means Anti-reflection Multi-coating.

Remark 2 AR+EMI including AR Multi-coating and Electro Magnetic Interference Blocking.

Remark 3 0.50 per step instead of 0.25.

Remark 4 1.00 per step instead of 0.50.

Remark 5 1.00 per step, aspheric design.

Remark 6 Quantity of each power not less than 30 pairs, 0.25 per step.

Remark 7 Quantity of each power not less than 30 pairs, 0.50 per step.

Semi-finished Lens

USD/Pair

Dia. (mm)	Curve		C. Thick. (mm)	Curve Radius (mm)		Price
	CVX(+)	CCV(-)		CVX(+)	CCV(-)	
65	0.00	10.00	2.8	0	52	2.430
65	0.00	12.00	2.8	0	44	2.860
65	0.00	14.00	2.8	0	37	4.290
65	0.00	15.00	2.8	0	35	5.430
65	2.00	10.00	2.8	262	52	2.290
65	2.00	12.00	2.8	262	44	2.430
65	4.00	6.00	6.0	131	87	2.570
65	6.00	6.00	9.8	87	87	2.860
65	6.00	6.00	11.8	87	87	3.290
65	8.00	6.00	11.8	65	87	3.290
65	10.00	6.00	11.8	52	87	3.580

- The extra fee for making AR Multi-coating on the convex (+) side is USD0.50/pair.

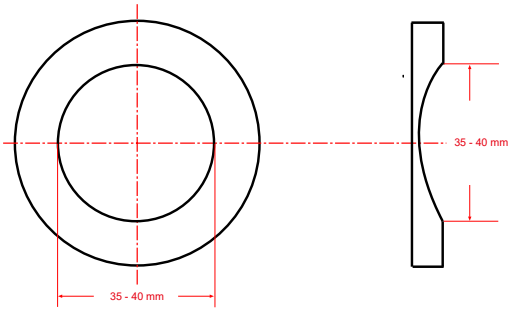

- The tolerance on usable size does not apply for lenses with a carrier curve.

- The white color is available regularly; pink and brown color subject to the availability of blanks.

Available Power Range

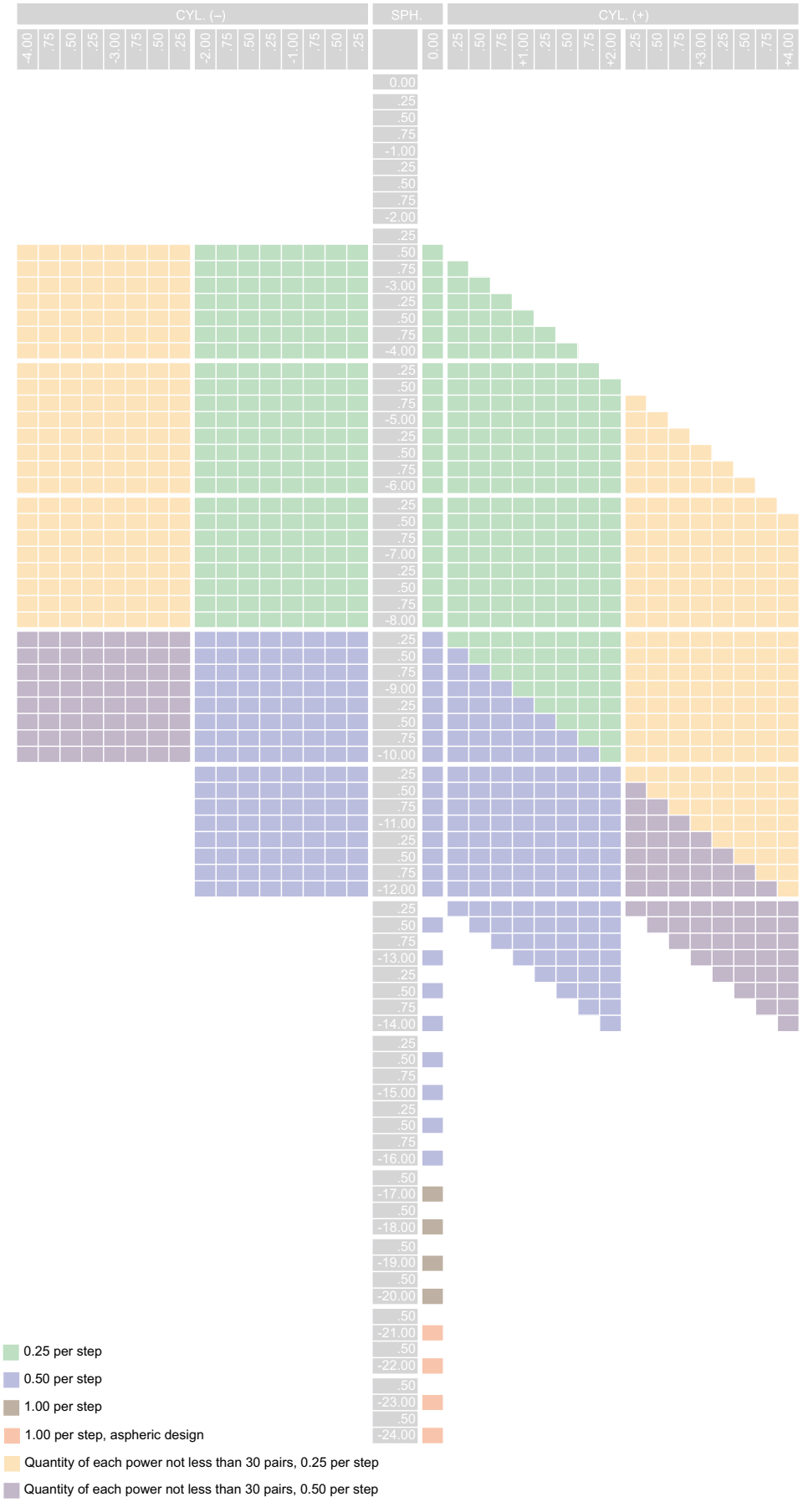

Curve & Thickness

Sph.	Curve		C. Thick. (mm)
	CVX (+)	CCV (-)	
.50	3.00	5.50	1.2
.75	3.00	5.75	1.2
-3.00	3.00	6.00	1.2
.25	3.00	6.25	1.2
.50	3.00	6.50	1.2
.75	3.00	6.75	1.2
-4.00	3.00	7.00	1.2
.25	2.50	6.75	1.2
.50	2.50	7.00	1.2
.75	2.50	7.25	1.2
-5.00	2.50	7.50	1.2
.25	2.50	7.75	1.2
.50	2.50	8.00	1.2
.75	2.50	8.25	1.2
-6.00	2.50	8.50	1.2
.25	2.00	8.25	1.2
.50	2.00	8.50	1.2
.75	2.00	8.75	1.2
-7.00	2.00	9.00	1.2
.25	2.00	9.25	1.2
.50	2.00	9.50	1.2
.75	2.00	9.75	1.2
-8.00	2.00	10.00	1.2
.25	1.00	9.25	1.0
.50	1.00	9.50	1.0
.75	1.00	9.75	1.0
-9.00	1.00	10.00	1.0
.25	1.00	10.25	1.0
.50	1.00	10.50	1.0
.75	1.00	10.75	1.0
-10.00	1.00	11.00	1.0
.50	0.00	10.50	0.8
-11.00	0.00	11.00	0.8
.50	0.00	11.50	0.8
-12.00	0.00	12.00	0.8
.50	0.00	12.50	0.8
-13.00	0.00	13.00	0.8
.50	0.00	13.50	0.8
-14.00	0.00	14.00	0.8
.50	0.00	14.50	0.8
-15.00	0.00	15.00	0.8
.50	0.00	15.50	0.8
-16.00	0.00	16.00	0.8
-17.00	0.00	17.00	0.8
-18.00	0.00	18.00	0.8
-19.00	0.00	19.00	0.8
-20.00	0.00	20.00	0.8
-21.00	0.00	21.00	0.8
-22.00	0.00	22.00	0.8
-23.00	0.00	23.00	0.8
-24.00	0.00	24.00	0.8

Pro 170 Plus - Dia60mm (White, Pink & Brown)





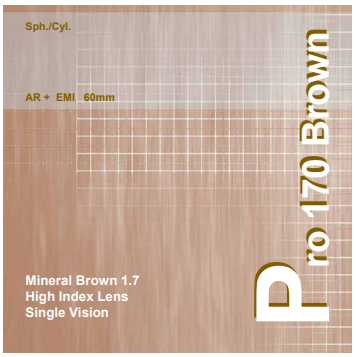

Price List

USD/Pair

	Sph.			Sph./Cyl.	
	+G6	+G8	+G10[3]	+G6.2	+G8.2
Un-coated	2.250	2.310	2.550	3.450	3.590
AR[1]	2.850	2.910	3.150	4.040	4.190
AR+EMI[2]	2.990	3.070	3.290	4.190	4.340

Remark 1 AR means Anti-reflection Multi-coating.

Remark 2 AR+EMI including AR Multi-coating and Electro Magnetic Interference Blocking.

Remark 3 0.50 per step instead of 0.25.

Available Power Range

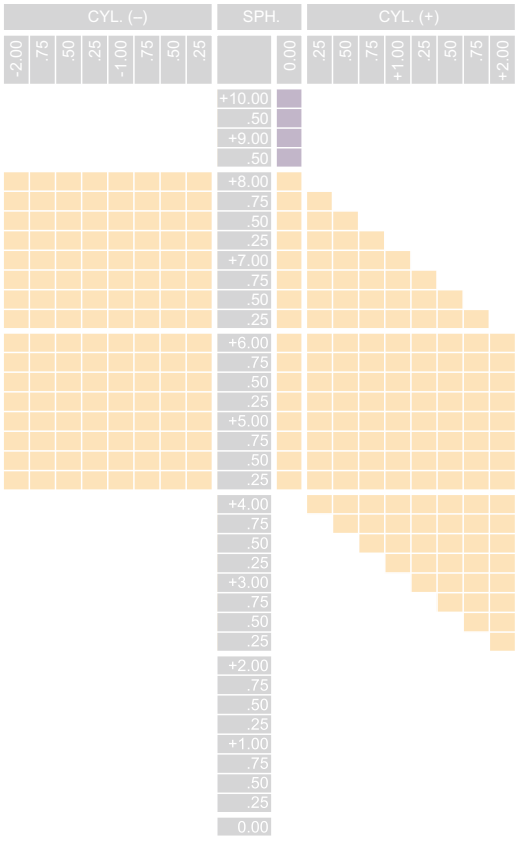

Quantity of each power not less than 30 pairs, 0.25 per step

Quantity of each power not less than 30 pairs, 0.50 per step

Curve & Thickness

Sph.	Curve		E. Thick. (mm)
	CVX (+)	CCV (-)	
+4.25	6.25	2.00	1.3
.50	6.50	2.00	1.3
.75	6.75	2.00	1.3
+5.00	7.00	2.00	1.3
.25	7.25	2.00	1.3
.50	7.50	2.00	1.3
.75	7.75	2.00	1.3
+6.00	8.00	2.00	1.3
.25	7.25	1.00	1.0
.50	7.50	1.00	1.0
.75	7.75	1.00	1.0
+7.00	8.00	1.00	1.0
.25	8.25	1.00	1.0
.50	8.50	1.00	1.0
.75	8.75	1.00	1.0
+8.00	9.00	1.00	1.0
.50	8.50	0.00	1.0
+9.00	9.00	0.00	1.0
.50	9.50	0.00	1.0
+10.00	10.00	0.00	1.0

- The white color is available regularly; pink and brown color subject to the availability of blanks.

Pro 180/Pro 190 - Dia60mm & Dia65mm (White & Pink)

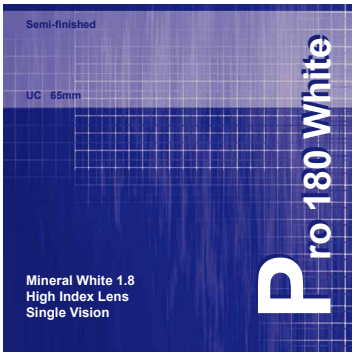





Semi-finished Lens - White & Pink 1.8 Hi-index

USD/Pair

Dia. (mm)	Curve		C. Thick. (mm)	Curve Radius (mm)		Price	
	CVX(+)	CCV(-)		CVX(+)	CCV(-)	White	Pink
60	0.00	8.00	3.3	0	65	20.840	20.840
60	0.00	10.00	3.3	0	52	23.610	23.610
60	0.00	12.00	3.3	0	44	26.630	26.630
60	0.00	14.00	3.3	0	37	30.070	30.070
60	2.00	7.00	3.3	262	75	16.590	16.590
60	2.00	9.00	3.3	262	58	19.250	19.250
65	0.00	10.00	3.3	0	52	30.280	30.280
65	0.00	12.00	3.3	0	44	35.340	35.340
65	0.00	14.00	3.3	0	37	39.900	39.900
65	0.00	16.00	3.3	0	33	45.730	45.730
65	2.00	4.00	3.3	262	131	15.590	15.590
65	2.00	5.00	3.3	262	105	17.300	17.300
65	2.00	6.00	3.3	262	87	18.770	18.770
65	2.00	7.00	3.3	262	75	20.830	20.830
65	2.00	8.00	3.3	262	65	22.680	22.680
65	2.00	9.00	3.3	262	58	24.600	24.600
65	2.00	10.00	3.3	262	52	26.990	26.990

- The extra fee for making AR Multi-coating on the convex (+) side is USD1.00/pair.

Semi-finished Lens - White 1.9 Hi-index

USD/Pair

Dia. (mm)	Curve		C. Thick. (mm)	Curve Radius (mm)		Price
	CVX(+)	CCV(-)		CVX(+)	CCV(-)	
60	0.00	8.00	3.3	0	65	48.670
60	0.00	10.00	3.3	0	52	54.000
60	0.00	12.00	3.3	0	44	58.000
60	0.00	14.00	3.3	0	37	62.670
60	0.00	16.00	3.3	0	33	68.670
60	2.00	6.00	3.3	262	87	33.330
60	2.00	8.00	3.3	262	65	40.000
65	0.00	10.00	3.3	0	52	70.000
65	0.00	12.00	3.3	0	44	76.670
65	0.00	14.00	3.3	0	37	83.330
65	2.00	5.00	3.3	262	105	38.000
65	2.00	6.00	3.3	262	87	42.000
65	2.00	7.00	3.3	262	75	47.330
65	2.00	8.00	3.3	262	65	53.330
65	2.00	9.00	3.3	262	58	58.670
65	2.00	10.00	3.3	262	52	65.330

- The extra fee for making AR Multi-coating on the convex (+) side is USD1.00/pair.



- Refraction index N_d=1.523.
- Abbe value 56.
- Density 2.41 g/cm^3.
- Used well throughout the year, both indoor and outdoor, in all climates and for many different activities.
- High original transmittance, high rate of darkening in the sun.
- AR multi-coating and AR+EMI coatings are available in greenish and bluish colors.
- Absorbing UV-ray and providing effective protection to the eyes.

Slim Photo - Dia60mm (Grey & Brown)

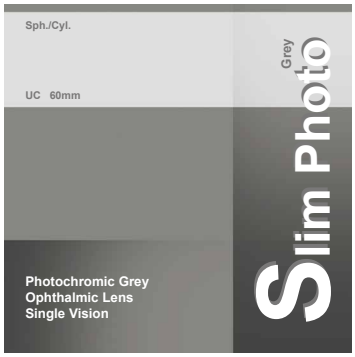



Price List

USD/Pair

		Sph.				Sph./Cyl.		
		Plano	±G2	±G4	±G6	±G2.2	±G4.2	±G6.2
Grey	Un-coated	1.120	1.460	1.810	2.570	2.670	3.690	
	AR[1]	1.690	2.030	2.380	3.150	3.240	4.260	
	AR+EMI[2]	1.830	2.170	2.520	3.290	3.380	4.410	
Brown	Un-coated	1.220	1.610	2.000	2.900	2.990	4.170	
	AR[1]	1.790	2.180	2.570	3.470	3.560	4.750	
	AR+EMI[2]	1.940	2.330	2.720	3.610	3.710	4.890	

Remark 1 AR means Anti-reflection Multi-coating.

Remark 2 AR+EMI including AR Multi-coating and Electro Magnetic Interference Blocking.

Available Power Range

Quantity of each power not less than 30 pairs, 0.25 per step

Curve & Thickness

Sph.	Curve		C. Thick. (mm)
	CVX (+)	CCV (-)	
0.00	5.00	5.00	2.0
.25	4.75	5.00	1.6
.50	4.50	5.00	1.6
.75	4.25	5.00	1.6
-1.00	4.00	5.00	1.6
.25	3.75	5.00	1.6
.50	3.50	5.00	1.6
.75	3.25	5.00	1.6
-2.00	3.00	5.00	1.6
.25	3.75	6.00	1.2
.50	3.50	6.00	1.2
.75	3.25	6.00	1.2
-3.00	3.00	6.00	1.2
.25	2.75	6.00	1.2
.50	2.50	6.00	1.2
.75	2.25	6.00	1.2
-4.00	2.00	6.00	1.2
.25	2.75	7.00	1.0
.50	2.50	7.00	1.0
.75	2.25	7.00	1.0
-5.00	2.00	7.00	1.0
.25	1.75	7.00	1.0
.50	1.50	7.00	1.0
.75	1.25	7.00	1.0
-6.00	1.00	7.00	1.0

Sph.	Curve		E. Thick. (mm)
	CVX (+)	CCV (-)	
.25	4.25	4.00	1.6
.50	4.50	4.00	1.6
.75	4.75	4.00	1.6
+1.00	5.00	4.00	1.6
.25	5.25	4.00	1.6
.50	5.50	4.00	1.6
.75	5.75	4.00	1.6
+2.00	6.00	4.00	1.6
.25	5.25	3.00	1.2
.50	5.50	3.00	1.2
.75	5.75	3.00	1.2
+3.00	6.00	3.00	1.2
.25	6.25	3.00	1.2
.50	6.50	3.00	1.2
.75	6.75	3.00	1.2
+4.00	7.00	3.00	1.2
.25	6.25	2.00	1.0
.50	6.50	2.00	1.0
.75	6.75	2.00	1.0
+5.00	7.00	2.00	1.0
.25	7.25	2.00	1.0
.50	7.50	2.00	1.0
.75	7.75	2.00	1.0
+6.00	8.00	2.00	1.0

Regular Photo - Dia65mm (Grey & Brown)

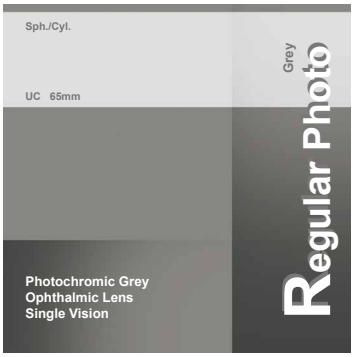



Price List

USD/Pair

		Sph.				Sph./Cyl.					
		Plano	±G2	±G4	±G6	±G2.2	±G4.2	±G6.2[3]	±G2.4[3]	±G4.4[3]	±G6.4
Grey	Un-coated	1.340	1.770	2.120	2.980	2.980	4.000	4.860	4.860	5.720	
	AR[1]	1.910	2.340	2.690	3.550	3.550	4.580	5.430	5.430	6.290	
	AR+EMI[2]	2.050	2.480	2.830	3.690	3.690	4.720	5.580	5.580	6.440	
Brown	Un-coated	1.460	1.960	2.340	3.330	3.330	4.520	5.510	5.510	6.490	
	AR[1]	2.030	2.540	2.910	3.900	3.900	5.100	6.080	6.080	7.060	
	AR+EMI[2]	2.170	2.680	3.060	4.040	4.040	5.240	6.230	6.230	7.200	

Remark 1 AR means Anti-reflection Multi-coating.

Remark 2 AR+EMI including AR Multi-coating and Electro Magnetic Interference Blocking.

Remark 3 Quantity of each power not less than 30 pairs, 0.25 per step.

Semi-finished Lens - Grey

USD/Pair

Dia. (mm)	Curve		C. Thick. (mm)	Curve Radius (mm)		Price
	CVX(+)	CCV(-)		CVX(+)	CCV(-)	
65	2.00	6.00	4.0	262	87	3.000
65	4.00	6.00	4.0	131	87	2.800
65	6.00	6.00	6.0	87	87	3.000

- Available thickness: 4.0mm - 11.0mm.
- The extra fee of adding each 1.0mm on thickness is USD0.25/pair.
- The extra fee for making AR Multi-coating on the convex (+) side is USD0.50/pair.

Semi-finished Lens - Brown

USD/Pair

Dia. (mm)	Curve		C. Thick. (mm)	Curve Radius (mm)		Price
	CVX(+)	CCV(-)		CVX(+)	CCV(-)	
65	2.00	6.00	4.0	262	87	3.430
65	4.00	6.00	4.0	131	87	3.120
65	6.00	6.00	6.0	87	87	3.430

- Available thickness: 4.0mm - 11.0mm.
- The extra fee of adding each 1.0mm on thickness is USD0.30/pair.
- The extra fee for making AR Multi-coating on the convex (+) side is USD0.50/pair.

Curve & Thickness

Sph.	Curve		C. Thick. (mm)
	CVX (+)	CCV (-)	
0.00	5.00	5.00	2.0
.25	4.75	5.00	1.6
.50	4.50	5.00	1.6
.75	4.25	5.00	1.6
-1.00	4.00	5.00	1.6
.25	3.75	5.00	1.6
.50	3.50	5.00	1.6
.75	3.25	5.00	1.6
-2.00	3.00	5.00	1.6
.25	3.75	6.00	1.2
.50	3.50	6.00	1.2
.75	3.25	6.00	1.2
-3.00	3.00	6.00	1.2
.25	2.75	6.00	1.2
.50	2.50	6.00	1.2
.75	2.25	6.00	1.2
-4.00	2.00	6.00	1.2
.25	2.75	7.00	1.0
.50	2.50	7.00	1.0
.75	2.25	7.00	1.0
-5.00	2.00	7.00	1.0
.25	1.75	7.00	1.0
.50	1.50	7.00	1.0
.75	1.25	7.00	1.0
-6.00	1.00	7.00	1.0

Sph.	Curve		E. Thick. (mm)
	CVX (+)	CCV (-)	
.25	4.25	4.00	1.6
.50	4.50	4.00	1.6
.75	4.75	4.00	1.6
+1.00	5.00	4.00	1.6
.25	5.25	4.00	1.6
.50	5.50	4.00	1.6
.75	5.75	4.00	1.6
+2.00	6.00	4.00	1.6
.25	5.25	3.00	1.2
.50	5.50	3.00	1.2
.75	5.75	3.00	1.2
+3.00	6.00	3.00	1.2
.25	6.25	3.00	1.2
.50	6.50	3.00	1.2
.75	6.75	3.00	1.2
+4.00	7.00	3.00	1.2
.25	6.25	2.00	1.0
.50	6.50	2.00	1.0
.75	6.75	2.00	1.0
+5.00	7.00	2.00	1.0
.25	7.25	2.00	1.0
.50	7.50	2.00	1.0
.75	7.75	2.00	1.0
+6.00	8.00	2.00	1.0

Available Power Range

0.25 per step

Quantity of each power not less than 30 pairs, 0.25 per step

Photo Bifocal - Dia65mm (Grey & Brown)

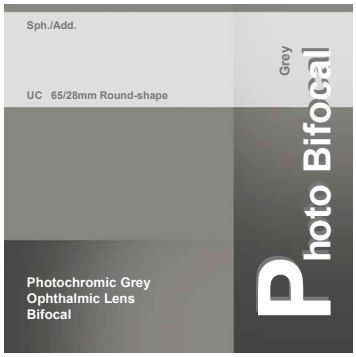

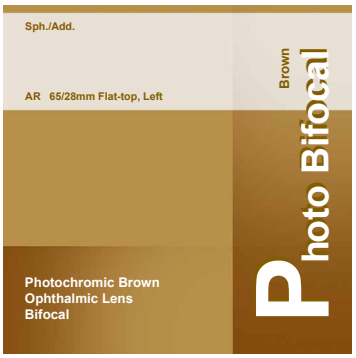

Price List

USD/Pair

Base 6.00		Round-shape 65mm, Seg. 28mm		Flat-top 65mm, Seg.28mm	
		Plano / Power	Power / Power	Plano / Power	Power / Power
Grey	Un-coated	5.550	5.890	9.320	9.670
	AR[1]	6.120	6.460	9.890	10.240
	AR+EMI[2]	6.270	6.600	10.040	10.390
Brown	Un-coated	6.160	6.570	10.520	10.890
	AR[1]	6.730	7.140	11.090	11.470
	AR+EMI[2]	6.880	7.280	11.230	11.610

Remark 1 AR means Anti-reflection Multi-coating.

Remark 2 AR+EMI including AR Multi-coating and Electro Magnetic Interference Blocking.

Available Power Range

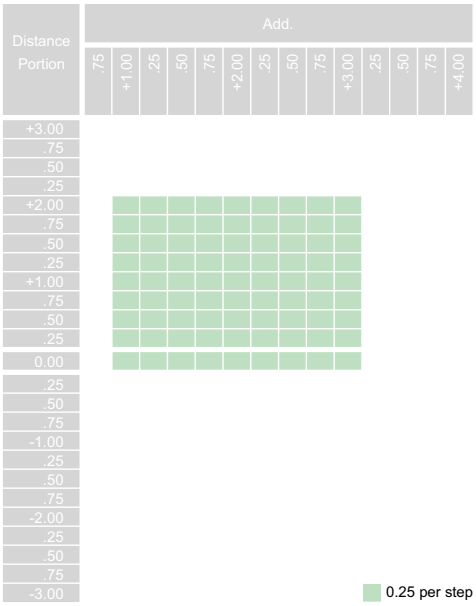

Semi-finished Lens - Round-shape Bifocal (Grey & Brown)

USD/Pair

Dia. (mm)	Curve		C. Thick. (mm)	Curve Radius (mm)		Price
	CVX(+)	CCV(-)		CVX(+)	CCV(-)	
65	4.00	6.00	6.0	131	87	6.720
65	6.00	6.00	6.0	87	87	5.720

- The extra fee for making AR Multi-coating on the convex (+) side is USD0.50/pair.

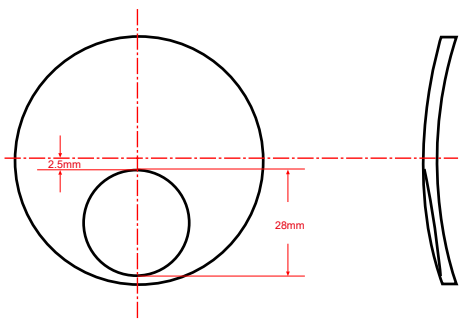

Semi-finished Lens - Flat-top Bifocal (Grey & Brown)

USD/Pair

Dia. (mm)	Curve		C. Thick. (mm)	Curve Radius (mm)		Price
	CVX(+)	CCV(-)		CVX(+)	CCV(-)	
65	4.00	6.00	6.0	131	87	10.580
65	6.00	6.00	6.0	87	87	9.440

- The extra fee for making AR Multi-coating on the convex (+) side is USD0.50/pair.

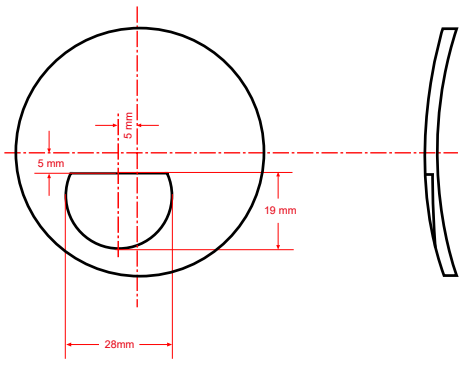

Mineral Photochromic

Sunlens & Polarized Lenses

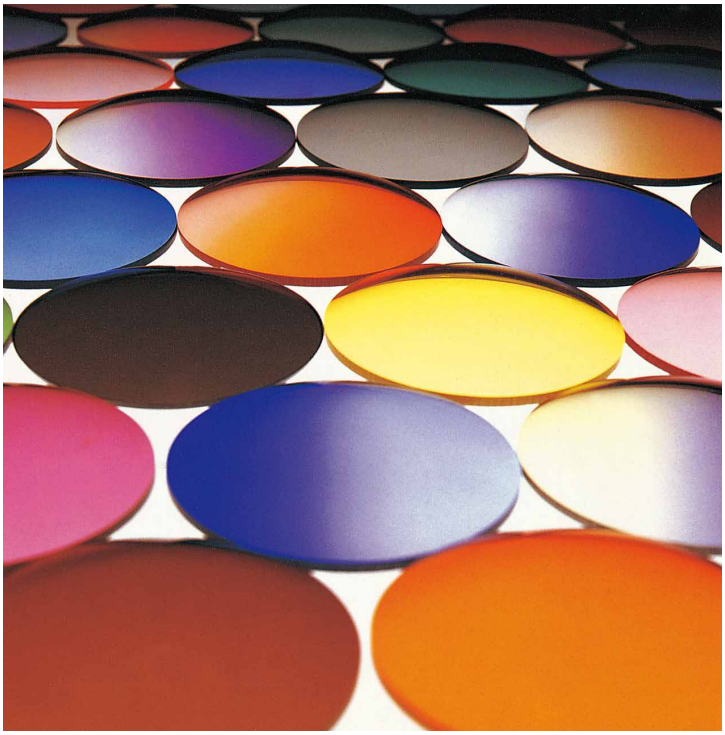

- Materials tinted CR-39 1.5 hard resin lens and optical sunlens glass.
- Various fashionable colors available.
- Both single color and gradual color lenses are available.
- Absorbing UV-ray and providing effective protection to the eyes.

Price List

USD/Pair

Items	Price
Mineral GG-15 Greenish Grey Lens, Plano, Dia65mm (Base 6.00, C. T. 2.0mm)	0.610
Mineral GG-15 Greenish Grey Lens, Plano, Dia70mm (Base 6.00, C. T. 2.0mm)	0.740
CR-39 1.5 Hard Resin Sunlens, Plano, Dia65mm, Single Color (Base 4.00/5.00/6.00/8.00, C.T. 1.8-2.4mm)	0.910
CR-39 1.5 Hard Resin Sunlens, Plano, Dia70mm, Single Color (Base 4.00/5.00/6.00/8.00, C.T. 1.8-2.4mm)	0.940
CR-39 1.5 Hard Resin Sunlens, Plano, Dia75mm, Single Color (Base 4.00/5.00/6.00/8.00, C.T. 1.8-2.4mm)	1.100
CR-39 1.5 Hard Resin Sunlens, Plano, Dia65mm, Gradual Color (Base 4.00/5.00/6.00/8.00, C.T. 1.8-2.4mm)	1.050
CR-39 1.5 Hard Resin Sunlens, Plano, Dia70mm, Gradual Color (Base 4.00/5.00/6.00/8.00, C.T. 1.8-2.4mm)	1.070
CR-39 1.5 Hard Resin Sunlens, Plano, Dia75mm, Gradual Color (Base 4.00/5.00/6.00/8.00, C.T. 1.8-2.4mm)	1.270

USD/Pair

Treatments	Extra Fee
Tinting Fee for CR-39 1.5 & 1.56 Hard Resin Power Lens (Final Price = Lens Price + Tinting Fee)	0.240
Fashion Mirror Coating (Final Price = Lens Price + Coating Fee. Various fashionable coating colors available)	0.700

Standard Colors

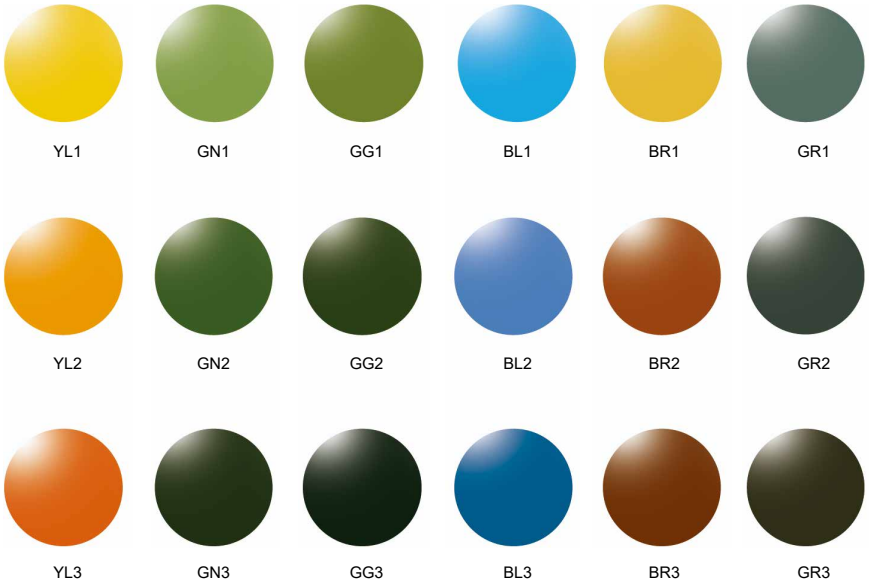

- Slight difference in color between the lens and the above-printed demo to be allowed.

CR-39 Polarized Lenses - Dia75mm, UV400



Price List

USD/Pair

	Dia75mm Plano 4.00 Base	Dia75mm Plano 5.00 Base	Dia75mm Plano 6.00 Base	Dia75mm Plano 8.00 Base
Un-coated	5.500	5.500	5.500	5.500
HC Non-Tnt.[1]	6.000	6.000	6.000	6.000
HC Tintable[2]	7.000	7.000	7.000	7.000
HMC[3]	7.000	7.000	7.000	7.000
HMC+EMI[4]	7.500	7.500	7.500	7.500

Remark 1 HC Non-Tnt. means Non-tintable Hard-coated, pencil hardness up to 7H.

Remark 2 HC Tintable means Color Tintable Hard-coated, pencil hardness up to 6H, min. quantity of each shipment is 5,000 pairs.

Remark 3 HMC including Hard + AR Multi-coating + Hydrophobic treatment.

Remark 4 HMC+EMI including Hard + AR Multi-coating + Hydrophobic and Electro Magnetic Interference Blocking.
Super Hydrophobic is available with a surcharge of USD0.30/pair and min. quantity of each shipment is 3,000 pairs.

Semi-finished Lens

USD/Pair

Dia. (mm)	Curve CVX(+)	Curve CCV(-)	C. Thick. (mm)	Curve Radius (mm) CVX(+)	Curve Radius (mm) CCV(-)	Price
75	2.00	6.00	6.0	262	87	7.750
75	4.00	6.00	6.0	131	87	7.750
75	6.00	6.00	6.0	87	87	7.750
75	8.00	4.00	10.0	65	131	8.000

- The edge thickness is available up to 12.0mm;
- The extra fee of adding each 1.0mm on thickness is USD1.00/pair.
- The extra fee for making Hard-coating (Non-tintable) on both sides is USD0.50/pair.
- The extra fee for making Hard-coating (Non-tintable) on both sides and AR Multicoating + Hydrophobic + EMI coating on the convex (+) side is USD1.00/pair.

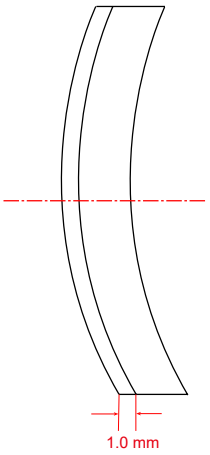

Standard Colors


GR1


GN2


BR2

- Slight difference in color between the lens and the above-printed demo to be allowed.

UV400

Curve & Thickness

Sph.	Curve CVX (+)	Curve CCV (-)	C. Thick. (mm)
0.00	5.00	5.00	2.2
.25	4.75	5.00	2.1
.50	4.50	5.00	2.1
.75	4.25	5.00	2.1
-1.00	4.00	5.00	2.1
.25	3.75	5.00	2.1
.50	3.50	5.00	2.1
.75	3.25	5.00	2.1
-2.00	3.00	5.00	2.1
.25	2.75	5.00	1.8
.50	2.50	5.00	1.8
.75	2.25	5.00	1.8
-3.00	2.00	5.00	1.8
.25	2.50	5.75	1.8
.50	2.25	5.75	1.8
.75	2.00	5.75	1.8
-4.00	1.75	5.75	1.8
.25	2.75	7.00	1.6
.50	2.50	7.00	1.6
.75	2.25	7.00	1.6
-5.00	2.00	7.00	1.6
.25	1.75	7.00	1.6
.50	1.50	7.00	1.6
.75	1.25	7.00	1.6
-6.00	1.00	7.00	1.6

Sph.	Curve CVX (+)	Curve CCV (-)	E. Thick. (mm)
.25	4.25	4.00	1.8
.50	4.50	4.00	1.8
.75	4.75	4.00	1.8
+1.00	5.00	4.00	1.8
.25	5.25	4.00	1.5
.50	5.50	4.00	1.5
.75	5.75	4.00	1.5
+2.00	6.00	4.00	1.5
.25	5.25	3.00	1.5
.50	5.50	3.00	1.5
.75	5.75	3.00	1.5
+3.00	6.00	3.00	1.5
.25	6.25	3.00	1.5
.50	6.50	3.00	1.5
.75	6.75	3.00	1.5
+4.00	7.00	3.00	1.5
.25	6.25	2.00	1.2
.50	6.50	2.00	1.2
.75	6.75	2.00	1.2
+5.00	7.00	2.00	1.2
.25	7.25	2.00	1.2
.50	7.50	2.00	1.2
.75	7.75	2.00	1.2
+6.00	8.00	2.00	1.2

Appendix 1 Coatings

Coating Structure

If necessary, additional hard-coating, AR (anti-reflection) multi-coating, HMC+EMI coating, and Hydrophobic (waterproof) coating will be provided. Coating structure is as follows.

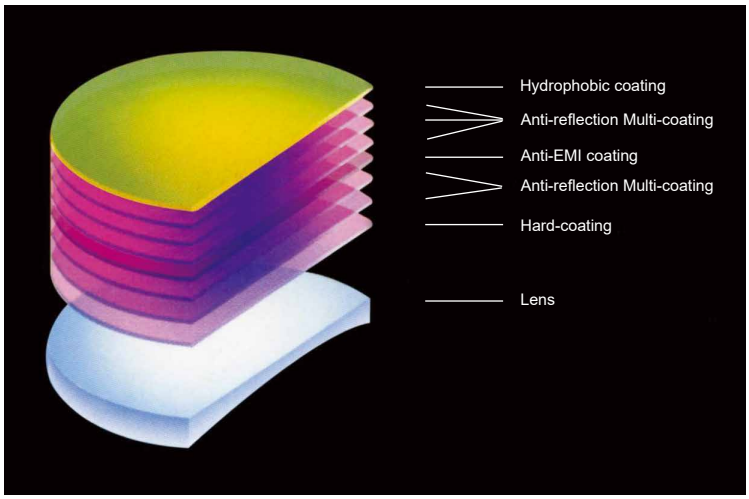

Structure of Coatings

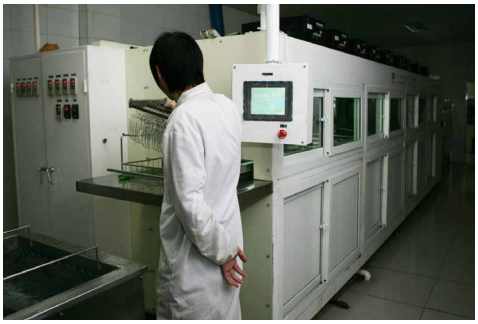

Ultrasonic Cleaning

Hard Coating

After thorough preparation, the plastic lenses are given a hard protective coating by dipping them into a polysiloxane lacquer. The lacquer is optimally matched to the base lens and the coating structure, it is reinforced by nano-particles to increase hardness and abrasion resistance.

The pencil hardness of non-tintable hard-coating is up to 7H; pencil hardness of color tintable hard-coating is up to 6H.

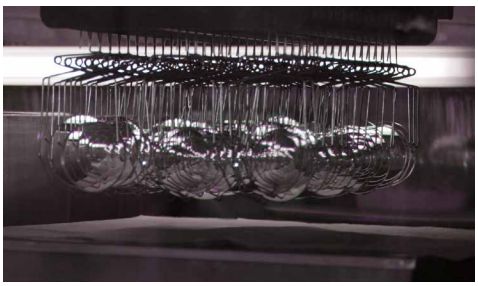

Hard Coating

AR+EMI Coating

Now, most ophthalmic lenses have AR (anti-reflection) multi-layer coating which is applied in a vacuum deposition system, some lenses also have Anti-EMI coating (Electro Magnetic Interference Blocking). The multi-layer, broad-band anti-reflection coating is applied in a vacuum coating machine. The coating provides optimum transparency with very low residual reflection.

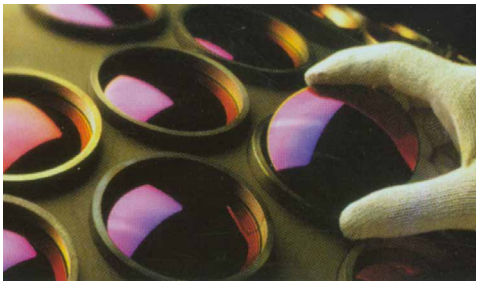

Transmission Comparison with White Clear Un-coated Lens

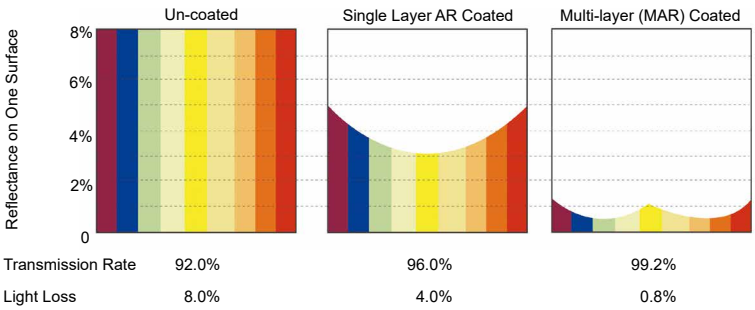

Transmission Rate	92.0%	96.0%	99.2%
Light Loss	8.0%	4.0%	0.8%





Anti-reflection Multi-layer Coating

Hydrophobic Coating

The hydrophobic coating is the last layer in the coating package, it provides the lens with an extremely smooth surface. This makes the lens extremely repellent to dirt, water and can be easily cleaned.

Appendix 2 Quality Control of Lenses

General

Both mineral (glass) and hard resin lenses conform to the following standards: ISO8980-1-2017, ISO8980-2-2017, ISO8980-3-2022, ISO8980-4-2006, ISO8980-5-2005, ISO10322-1-2016, ISO10322-2-2016, ISO13666-2019, ISO14889-2013, ISO/TR28980-2007, GB10810-1-2005, GB10810-2-2006, GB10810-3-2006, GB10810-4-2012, GB10810-5-2012, GB27995-1-2011, GB27995-2-2011, QB2682-2005, QB/T2702-2005. Hard resin lenses also conform to QB/T2506-2017 standard. Quality control system of Y&S is ISO9001 (2015) certified. Y&S offers a 1-year limited warranty.

Material & Surface Shortcomings

Each lens is divided into 3 zones as shown in the Carl Zeiss Master Plate.

Lens Diameter	Zone A	Zone B	Zone C
55mm	30.0mm	9.5mm	3.0mm
60mm	30.0mm	12.0mm	3.0mm
65mm	35.0mm	12.0mm	3.0mm
70mm	40.0mm	12.0mm	3.0mm
72mm	45.0mm	10.5mm	3.0mm

Carl Zeiss Master Plate


Cosmetic Inspection

Cosmetic inspection is carried out by experienced inspectors based on the Carl Zeiss Master Plate. The following table is only a recommendation to the inspectors since the cosmetic inspection is subjective. All lenses offered in this Purchase Guide are first quality lenses unless notified.

		1st Quality Lens	2nd Quality Lens
Scratch	Zone A	If width ⩽ 0.1mm, length ⩽ 2.0mm, 1 allowed.	If width ⩽ 0.3mm, length ⩽ 5.0mm, 2 allowed, but not centralized.
	Zone B	If width ⩽ 0.1mm, length ⩽ 2.0mm, 1 allowed.	If width ⩽ 0.3mm, length ⩽ 7.0mm, 3 allowed, but not centralized.
	Zone C	If width ⩽ 0.2mm, length ⩽ 5.0mm, 2 allowed, but not centralized.	If width ⩽ 0.3mm, length ⩽ 10.0mm, 3 allowed, but not centralized.
Dots	Zone A	Not allowed.	If diameter ⩽ 0.2mm, 2 allowed, but not centralized.
	Zone B	If diameter ⩽ 0.2mm, 1 allowed.	If diameter ⩽ 0.3mm, 3 allowed, but not centralized.
	Zone C	If diameter ⩽ 0.2mm, 2 allowed, but not centralized.	If diameter ⩽ 0.5mm, 3 allowed, but not centralized.
Bubbles	Zone A	Not allowed.	Not allowed.
	Zone B	Not allowed.	If diameter ⩽ 0.5mm, 1 allowed.
	Zone C	If diameter ⩽ 0.5mm, 1 allowed.	If diameter ⩽ 0.5mm, 1 allowed.
Inclusions	Zone A	Not allowed.	Not allowed.
	Zone B	Not allowed.	If diameter ⩽ 0.5mm, 1 allowed.
	Zone C	If diameter ⩽ 0.2mm, 1 allowed.	If diameter ⩽ 2.0mm, 1 allowed.
Chips	Zone A	Not allowed.	Not allowed.
	Zone B	Not allowed.	Not allowed.
	Zone C	If width ⩽ 0.5mm, length ⩽ 2.0mm, 1 allowed.	If width ⩽ 1.0mm, length ⩽ 3.0mm, 2 allowed, but not centralized.

Power Testing & Marking

The power of each lens is inspected and printed on the lens cover by Y&S Power Testing & Marking System. To avoid personal mistakes, lens power is tested by a computerized lensmeter piece by piece, data will be transferred to the computer automatically, power and descriptions are printed onto the lens cover at the same time.


Power Testing & Marking

Drop Ball Test

Drop ball test is carried according to the FDA 21CFR801.410 standard.


Random Check

Random Check

The random check is made according to ISO2859, ISO3951, and GB2828 standards, parameters for the sampling is Level 2, AQL 4.0.

Lot Size (Pieces)	Sample Size (Pieces)	Max. Rejection (Pieces)
90 - 150	20	2
151 - 280	32	3
281 - 500	50	5
501 - 1,200	80	7
1,201 - 3,200	125	10
3,201 - 10,000	200	14
10,001 - 35,000	315	21

Appendix 3 Package of Lenses

(1) Ophthalmic lenses are packed in color-printed lens covers (offset printing), one lens cover for each piece. Usually, lenses will be packed with the following inner boxes and standard seaworthy export cartons.

Items	Inner Boxes		Export Cartons and Estimated Gross Weight	
	Type A 180x95x95mm	Type B 360x95x95mm	Type 1, Size 400x380x320mm (24 A Boxes or 12 B Boxes)	Type 2, Size 590x380x320mm (36 A Boxes or 18 B Boxes)
Hard Resin Lenses, Finished	○	●	○ 10-14 Kgs	● 16-22 Kgs
Hard Resin Lenses, Semi-finished		●	○ 10-14 Kgs	● 16-22 Kgs
Mineral Lenses, Finished	●		● 20-26 Kgs	
Mineral Lenses, Semi-finished		●	● 22-30 Kgs	

● Default Package ○ Optional Package

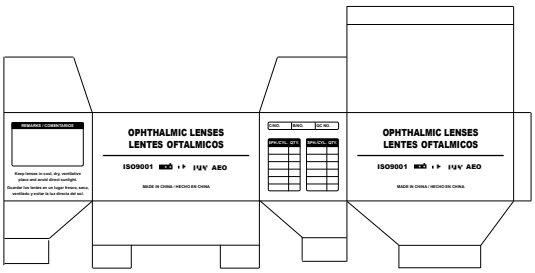

Inner Box Type A (180x95x95mm)

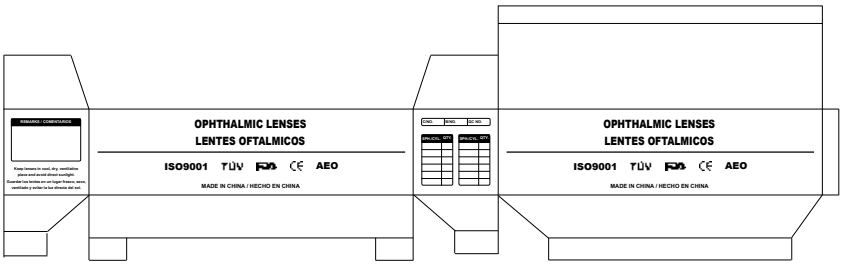

Inner Box Type B (360x95x95mm)

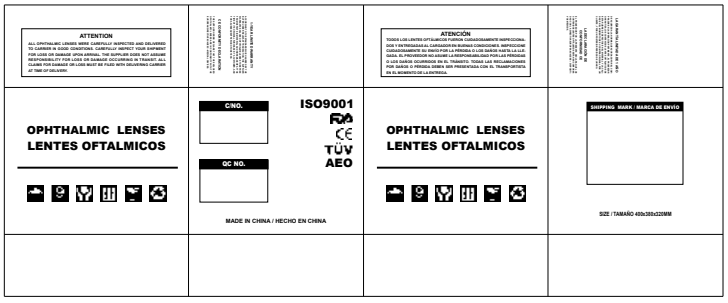

Export Carton Type 1 (400x380x320mm)

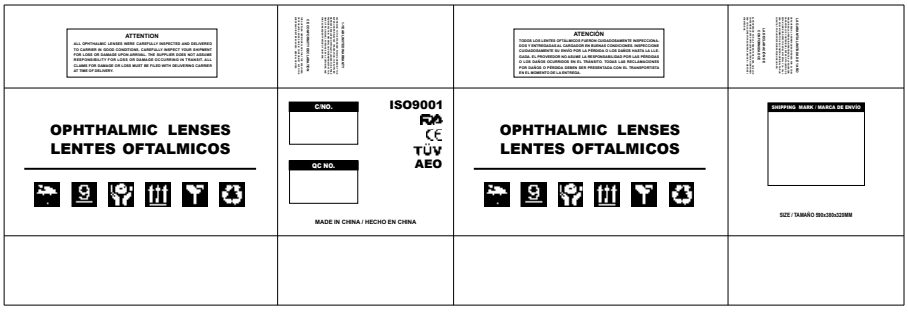

Export Carton Type 2 (590x380x320mm)

If necessary, a Packing Details List will be submitted by Y&S after shipment showing products and powers in each carton and each inner box.

(2) To make it easy for all relevant parties to handle the goods, usually, Y&S's invoice number is shown on each carton as a shipping mark, provided no more instruction from the customer.

(3) Lenses can be packed in Y&S's general lens covers without showing Y&S's information which is shown in this Purchase Guide free of charge. Provided any shipment of more than 5,000 pairs (10,000 pieces), Y&S can also pack lenses with one lens cover design appointed by the customer free of charge; otherwise, Y&S will charge an extra fee of USD100.00 for each design. The customer is suggested to make its design according to the following shape, size, and gluing process.

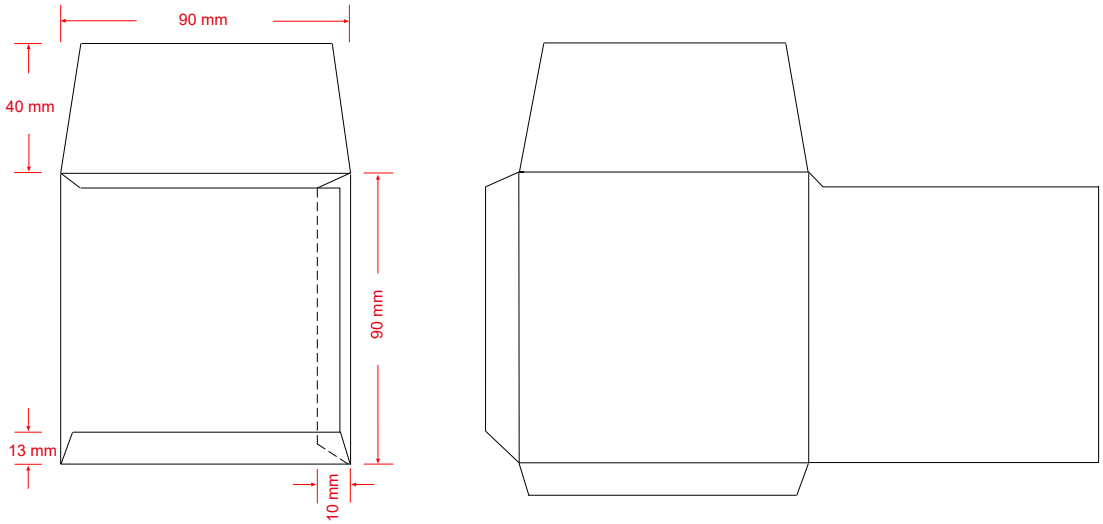

Shape, Size and Gluing Process

Customers are welcome to send their very own lens cover design to Y&S by CD, DVD, or e-mail, Y&S will make the necessary artwork to improve or complete the design free of charge. The files can be edited under a personal computer (PC system) with Macromedia Freehand 10, Adobe InDesign CS6, Adobe Illustrator CS6, or Corel Draw X6, the resolution should be not less than 300 dpi, and the suggested lens cover size should be not more than 90x90mm. We will not accept any files created or edited under the Mac system or any other Apple products.

Provided the customer is not familiar with the above software, they can submit lens cover samples, designs, logo, graphics, descriptions, and company information, Y&S will make necessary artwork free of charge. Any revised lens cover design will be sent to the customer in the graphics format through e-mail for their approval before printing.

(4) A barcode on each lens cover is available with an extra fee of USD0.02/pair (USD0.01/piece). The customer needs to submit its barcode data in detail. The system of Y&S can create barcodes in the formats listed below. If there is no special requirement from the customer, the Code 128 format will be used. The barcode label size will be 60x20mm, usually, it will be put at the top of the front side of each lens cover of finished lenses or the top side of each lens box of semi-finished lenses.

Codabar;
Code 39 (ASCII);
Code 93;
Composite (EAN.UCC), RSS-14 Stacked;
Composite (EAN.UCC), RSS-14 Truncated;
ITF-14;
MSI Plessey;
QR Code;
RSS Limited;
RSS-14 Stacked;
RSS-14 Truncated;
UCC-EAN 128;
UPC-E;
Code 128;
Code 39 (Full ASCII);
Composite (EAN.UCC), RSS-14;
Composite (EAN.UCC), RSS-14 Stacked Omni-Directional;
Data Matrix;
MicroPDF417;
PDF417;
RSS Expanded;
RSS-14;
RSS-14 Stacked Omni-Directional;
TLC 39;
UPC-A;
2 of 5 Inter Leaved.

(5) For hard resin lenses, the inside lining in the lens cover is free of charge.

Ophthalmic Lens Blanks



TÜV CE AEO

ISO9001 ISO14001 OHSAS18001

General Conditions

(1) General glass blanks conform to GB/T14148-2011 standard; photochromic glass blanks conform to GB9105-1988 standard. Y&S offers a 1-year limited warranty.

(2) The quality management system of Y&S is ISO9001 (2015) and GB/T19001-2016 certified. The environmental management system of Y&S is ISO14001 (2015) and GB/T24001-2016 certified. The occupational health and safety management system of Y&S is OHSAS18001 (2007) and GB/T28001-2011 certified.

(3) Goods are approved by TUV according to CE standard (Medical Devices Directive 93/42/EEC Annex VII, TUV Report No. 15016632002).

(4) All prices of blanks offered in this Purchase Guide are in US Dollars per pair (2 pieces); the price of mold glass is in US Dollars per piece. Discounts are applicable for large quantity orders.

(5) Usually, the minimum quantity of each shipment of ophthalmic lens blank is 2,000 pairs (4,000 pieces). For quantity between 2,000 and 20,000 pairs, all prices are on FCA/FOB Shanghai, China basis, Y&S will either deliver goods on FCA/FOB basis or charge freight and insurance fees respectively. If the quantity of each shipment is less than 2,000 pairs (4,000 pieces), Y&S will charge USD100.00 extra fee under each shipment and either deliver goods on FCA/FOB basis or charge freight and insurance fees respectively.

(6) If the total quantity of each shipment is more than 20,000 pairs (40,000 pieces), all prices can be on CFR (C&F) Overseas Main Port basis by sea. To have a shipment by air, Y&S will either deliver goods on FCA Shanghai, China basis or on CPT, CIF, CIP basis, provided air freight and insurance fees will be charged respectively.

(7) If a transaction is made on CIF or CIP basis, insurance will be arranged by Y&S for 110% of invoice value covering all risks, provided no other requirements from the customer.

(8) Blanks with special specifications (such as size, curve, and thickness) are available subject to the availability of melt, molds, and thickness control. The minimum quantity of making each special specification is 20,000 pairs (40,000 pieces).

(9) Due to stock status or production arrangement, Y&S has the right to replace part of ordered blanks with curver, thicker or bigger size blanks without any surcharge to the customer unless the customer refuses such a thing in written while placing the order.

(10) The customer is suggested to accept adjustments on the quantity of each power to fit for full carton packing, it will be convenient for both Y&S and its customers to handle consignments and inventory.

(11) To deliver each order quickly, a maximum shortage of 5% on quantity or transaction value is allowed without prior notice. Y&S will provide a detailed list of the shortage to the customer after shipment. Y&S will either adjust relevant quantity and value in shipping documents in the current order or adjust with the customer in future orders.

(12) Ophthalmic lens blanks (glasses for corrective spectacles) are cleared by Chinese customs under H.S. code 7015.10; mold glass (glass for technical use) are cleared by Chinese customs under H.S. Code 7020.00. If necessary, the H.S. code of the importing country can be shown in shipping documents according to the customer's requirement.

(13) Goods are of China origin. Commercial Invoices, Packing Lists, and Bill of Lading or Air Waybill will be submitted by Y&S under each shipment. An Insurance Policy or Insurance Certificate will be provided when the transaction is made on CIF or CIP basis. One of the following Certificate of Origin can also be submitted upon the customer's request:

- Certificate of Origin approved by CCPIT - China Council for the Promotion of International Trade (China Chamber of International Commerce)
- Certificate of Origin (Asia-Pacific Trade Agreement) approved by CCPIT - China Council for the Promotion of International Trade (China Chamber of International Commerce)
- Certificate of Origin (Form for China-Peru FTA) approved by CCPIT - China Council for the Promotion of International Trade (China Chamber of International Commerce)
- Certificate of Origin (GSP Form-A) approved by China Entry-Exit Inspection and Quarantine Bureau (CIQ)
- Certificate of Origin (Form F for China-Chile FTA) approved by China Entry-Exit Inspection and Quarantine Bureau (CIQ)

(14) Pre-shipment inspections by China Entry-Exit Inspection and Quarantine Bureau (CIQ), SGS, BIVAC, Intertek, COTECNA, and others will be handled by Y&S, provided inspection applied and inspection fee paid by the customer when confirming orders.

(15) Y&S is entitled to charge a storage fee and other relevant fees if the customer doesn't pick up goods within 30 days after the goods are ready.

(16) The following payment terms are accepted by Y&S:

- L/C: By irrevocable L/C at sight, provided the covering L/C being received by Y&S on time and remaining valid for negotiation in China until the 21st day after shipment. L/C should be in English and show the full contact information of Y&S.
- T/T: 30% of the total contract value to be paid by T/T while confirming the order; balance payment to be paid by T/T before shipment.

(17) Y&S keeps the right to adjust prices, technical data, and conditions without prior notice. Adjusted prices, technical data, and conditions can be downloaded from Y&S's website www.ystj.com.

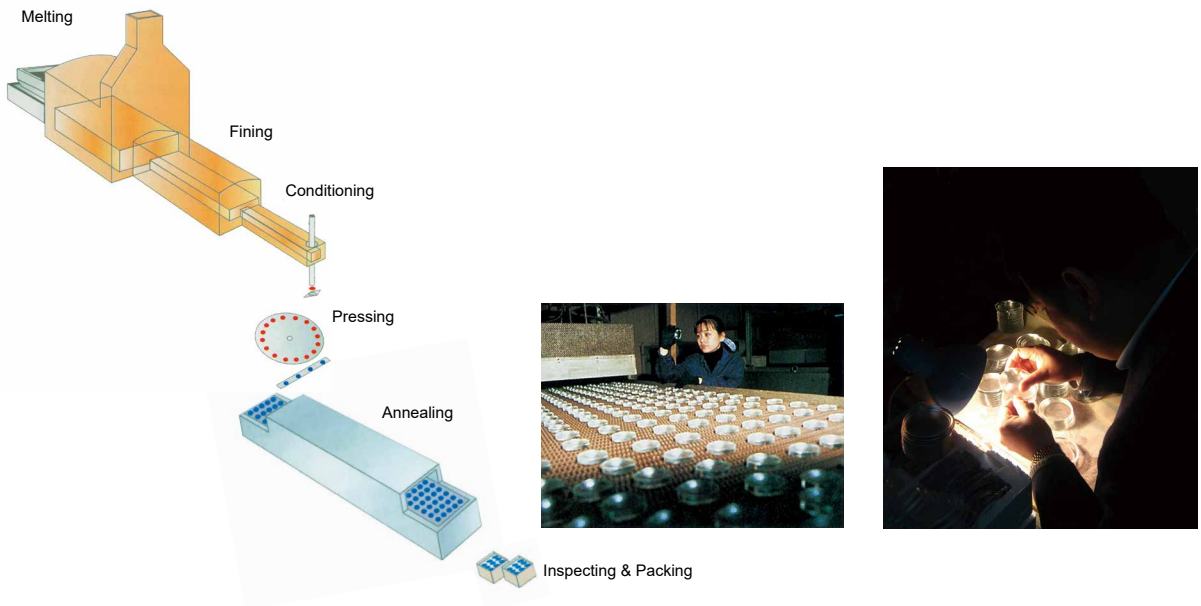

Main Process of Making Ophthalmic Lens Blanks

1.523 Optical White (Crown) Lens Blanks

- Refraction index N_d=1.523
- Abbe value 58
- Density 2.53 g/cm^3
- Transmission rate of white light ⩾ 91%
- UV cut-off 330 nm
- Linear thermal expansion coefficient (0-300°C) 90.8 x 10^{-7}/ °C
- Compressive stress birefringence ⩽ 70 nm/cm
- Annealing Point 520°C

USD/Pair

Code	Dia. (mm)	Curve		C. Thick. (mm)	Curve Radius (mm)		Price
		CVX(+)	CCV(-)		CVX(+)	CCV(-)	
W550080000079	50	8.00	0.00	7.9	65	0	-------
W550100000098	50	10.00	0.00	9.8	52	0	-------
W550120000117	50	12.00	0.00	11.7	44	0	-------
W556000060030	56	0.00	6.00	3.0	0	87	0.310
W556010060030	56	1.00	6.00	3.0	523	87	0.270
W556010080030	56	1.00	8.00	3.0	523	65	0.350
W556020060030	56	2.00	6.00	3.0	262	87	0.230
W556030060030	56	3.00	6.00	3.0	174	87	0.180
W556040060030	56	4.00	6.00	3.0	131	87	0.160
W556050060030	56	5.00	6.00	3.0	105	87	0.140
W556060000090	56	6.00	0.00	9.0	87	0	0.310
W556060010080	56	6.00	1.00	8.0	87	523	0.270
W556060020070	56	6.00	2.00	7.0	87	262	0.230
W556060030060	56	6.00	3.00	6.0	87	174	0.180
W556060040050	56	6.00	4.00	5.0	87	131	0.160
W556060050040	56	6.00	5.00	4.0	87	105	0.140
W556060060028	56	6.00	6.00	2.8	87	87	-------
W556060060030	56	6.00	6.00	3.0	87	87	0.130
W556060060035	56	6.00	6.00	3.5	87	87	0.140
W556060060040	56	6.00	6.00	4.0	87	87	0.170
W556060060050	56	6.00	6.00	5.0	87	87	0.210
W556060060060	56	6.00	6.00	6.0	87	87	0.250
W556060060070	56	6.00	6.00	7.0	87	87	0.330
W556060060080	56	6.00	6.00	8.0	87	87	0.360
W556060060090	56	6.00	6.00	9.0	87	87	0.400
W556060060100	56	6.00	6.00	10.0	87	87	0.440
W556060060120	56	6.00	6.00	12.0	87	87	0.550
W556080000083	56	8.00	0.00	8.3	65	0	-------
W556080010100	56	8.00	1.00	10.0	65	523	0.350
W556100000103	56	10.00	0.00	10.3	52	0	-------
W556120000123	56	12.00	0.00	12.3	44	0	-------
W560000060030	60	0.00	6.00	3.0	0	87	0.340
W560010060030	60	1.00	6.00	3.0	523	87	0.300
W560010080030	60	1.00	8.00	3.0	523	65	0.380
W560020060030	60	2.00	6.00	3.0	262	87	0.260
W560030060030	60	3.00	6.00	3.0	174	87	0.220
W560040060030	60	4.00	6.00	3.0	131	87	0.180
W560050060030	60	5.00	6.00	3.0	105	87	0.160
W560060000090	60	6.00	0.00	9.0	87	0	0.340
W560060010080	60	6.00	1.00	8.0	87	523	0.300
W560060020070	60	6.00	2.00	7.0	87	262	0.260
W560060030060	60	6.00	3.00	6.0	87	174	0.220
W560060040050	60	6.00	4.00	5.0	87	131	0.180
W560060050040	60	6.00	5.00	4.0	87	105	0.160
W560060060028	60	6.00	6.00	2.8	87	87	-------
W560060060030	60	6.00	6.00	3.0	87	87	0.140
W560060060035	60	6.00	6.00	3.5	87	87	0.170
W560060060040	60	6.00	6.00	4.0	87	87	0.180
W560060060050	60	6.00	6.00	5.0	87	87	0.220
W560060060060	60	6.00	6.00	6.0	87	87	0.260
W560060060070	60	6.00	6.00	7.0	87	87	0.360
W560060060080	60	6.00	6.00	8.0	87	87	0.420
W560060060090	60	6.00	6.00	9.0	87	87	0.470
W560060060100	60	6.00	6.00	10.0	87	87	0.520

Code	Dia. (mm)	Curve		C. Thick. (mm)	Curve Radius (mm)		Price
		CVX(+)	CCV(-)		CVX(+)	CCV(-)	
W560060060120	60	6.00	6.00	12.0	87	87	0.650
W560080000097	60	8.00	0.00	9.7	65	0	-------
W560080010100	60	8.00	1.00	10.0	65	523	0.380
W560120000117	60	12.00	0.00	11.7	44	0	-------
W560120000137	60	12.00	0.00	13.7	44	0	-------
W565000060030	65	0.00	6.00	3.0	0	87	0.460
W565010060030	65	1.00	6.00	3.0	523	87	0.400
W565010080030	65	1.00	8.00	3.0	523	65	0.520
W565020060030	65	2.00	6.00	3.0	262	87	0.350
W565030060030	65	3.00	6.00	3.0	174	87	0.310
W565040060030	65	4.00	6.00	3.0	131	87	0.270
W565050060030	65	5.00	6.00	3.0	105	87	0.230
W565060000090	65	6.00	0.00	9.0	87	0	0.460
W565060010080	65	6.00	1.00	8.0	87	523	0.400
W565060020070	65	6.00	2.00	7.0	87	262	0.350
W565060030060	65	6.00	3.00	6.0	87	174	0.310
W565060040050	65	6.00	4.00	5.0	87	131	0.270
W565060050040	65	6.00	5.00	4.0	87	105	0.230
W565060060028	65	6.00	6.00	2.8	87	87	-------
W565060060030	65	6.00	6.00	3.0	87	87	0.220
W565060060035	65	6.00	6.00	3.5	87	87	0.260
W565060060040	65	6.00	6.00	4.0	87	87	0.290
W565060060050	65	6.00	6.00	5.0	87	87	0.340
W565060060060	65	6.00	6.00	6.0	87	87	0.400
W565060060070	65	6.00	6.00	7.0	87	87	0.480
W565060060080	65	6.00	6.00	8.0	87	87	0.560
W565060060090	65	6.00	6.00	9.0	87	87	0.640
W565060060100	65	6.00	6.00	10.0	87	87	0.720
W565060060120	65	6.00	6.00	12.0	87	87	0.910
W565080010100	65	8.00	1.00	10.0	65	523	0.520
W570000060030	70	0.00	6.00	3.0	0	87	0.560
W570010060030	70	1.00	6.00	3.0	523	87	0.490
W570010080030	70	1.00	8.00	3.0	523	65	0.650
W570020060030	70	2.00	6.00	3.0	262	87	0.460
W570030060030	70	3.00	6.00	3.0	174	87	0.390
W570040060030	70	4.00	6.00	3.0	131	87	0.330
W570050060030	70	5.00	6.00	3.0	105	87	0.290
W570060000090	70	6.00	0.00	9.0	87	0	0.560
W570060020070	70	6.00	1.00	8.0	87	523	0.490
W570060020070	70	6.00	2.00	7.0	87	262	0.460
W570060030060	70	6.00	3.00	6.0	87	174	0.390
W570060040050	70	6.00	4.00	5.0	87	131	0.330
W570060050040	70	6.00	5.00	4.0	87	105	0.290
W570060060030	70	6.00	6.00	3.0	87	87	0.260
W570060060035	70	6.00	6.00	3.5	87	87	-------
W570060060040	70	6.00	6.00	4.0	87	87	0.330
W570060060050	70	6.00	6.00	5.0	87	87	0.390
W570060060060	70	6.00	6.00	6.0	87	87	0.470
W570060060070	70	6.00	6.00	7.0	87	87	0.550
W570060060080	70	6.00	6.00	8.0	87	87	0.620
W570060060090	70	6.00	6.00	9.0	87	87	0.700
W570060060100	70	6.00	6.00	10.0	87	87	0.780
W570060060120	70	6.00	6.00	12.0	87	87	1.040
W570080010100	70	8.00	1.00	10.0	65	523	0.650

Flint Buttons for Bifocal Lenses

- Refraction index N_d=1.654
- Density 3.85 g/cm^3
- Abbe value 37
- Strain Point 454°C
- Annealing Point 480°C
- Softening Point 518°C
- Linear thermal expansion coefficient (20-300°C) 96.9x10^{-7}/°C
- White round-shape flint buttons available

White Flint 1.654 Button

USD/Pair

Code	Dia. (mm)	Curve		C. Thick. (mm)	Curve Radius (mm)		Price
		CVX(+)	CCV(-)		CVX(+)	CCV(-)	
F628000000035	28	0.00	0.00	3.6	0	0	0.180
F628000000040	28	0.00	0.00	4.0	0	0	0.210
F630000000035	30	0.00	0.00	3.6	0	0	0.210
F630000000040	30	0.00	0.00	4.0	0	0	0.230
F633000000035	33	0.00	0.00	3.6	0	0	0.230
F633000000040	33	0.00	0.00	4.0	0	0	0.270

Photochromic Flint 1.654 Button

USD/Pair

Code	Dia. (mm)	Curve		C. Thick. (mm)	Curv. Radius (mm)		Price
		CVX(+)	CCV(-)		CVX(+)	CCV(-)	
F830000000038	30	0.00	0.00	3.8	0	0	0.390
F835000000040	35	0.00	0.00	4.0	0	0	0.460

Sunlens Blanks (GG-15)

- Refraction index N_d=1.523
- Density 2.53 g/cm^3

GG-15 Greenish Grey Sunlens Blank

USD/Pair

Code	Dia. (mm)	Curve		C. Thick. (mm)	Curve Radius (mm)		Price
		CVX(+)	CCV(-)		CVX(+)	CCV(-)	
G560060060028	60	6.00	6.00	2.8	87	87	0.330
G560060060040	60	6.00	6.00	4.0	87	87	0.380
G560060060050	60	6.00	6.00	5.0	87	87	0.440
G560060060060	60	6.00	6.00	6.0	87	87	0.520
G565060060028	65	6.00	6.00	2.8	87	87	0.340
G565060060040	65	6.00	6.00	4.0	87	87	0.390
G565060060050	65	6.00	6.00	5.0	87	87	0.460
G565060060060	65	6.00	6.00	6.0	87	87	0.530
G570060060028	70	6.00	6.00	2.8	87	87	0.390
G570060060040	70	6.00	6.00	4.0	87	87	0.460
G570060060050	70	6.00	6.00	5.0	87	87	0.530
G570060060060	70	6.00	6.00	6.0	87	87	0.650

1.7 Hi-index Lens Blanks

- Refraction index N_d=1.7
- Abbe Value 35
- Density 3.10 g/cm^3
- Compressive stress birefringence ⩽ 80 nm/cm
- White, pink and brown color available
- Transmission for white light ⩾ 86% (white), 80% (pink) & 78% (brown)

USD/Pair

Code			Dia.	Curve		C. Thick.	Curve Radius (mm)		Price
White	Pink	Brown	(mm)	CVX(+)	CCV(-)	(mm)	CVX(+)	CCV(-)	
W760000100033	P760000100033	B760000100033	60	0.00	10.00	3.3	0	52	1.950
W760000120033	P760000120033	B760000120033	60	0.00	12.00	3.3	0	44	2.280
W760000140050	P760000140050	B760000140050	60	0.00	14.00	5.0	0	37	3.580
W760020075033	P760020075033	B760020075033	60	2.00	7.50	3.3	262	70	1.300
W760020080033	P760020080033	B760020080033	60	2.00	8.00	3.3	262	65	1.370
W760020090033	P760020090033	B760020090033	60	2.00	9.00	3.3	262	58	1.500
W760020100033	P760020100033	B760020100033	60	2.00	10.00	3.3	262	52	1.660
W760030045033	P760030045033	B760030045033	60	3.00	4.50	3.3	174	116	0.910
W760030055033	P760030055033	B760030055033	60	3.00	5.50	3.3	174	95	1.010
W760030065033	P760030065033	B760030065033	60	3.00	6.50	3.3	174	80	1.120
W760030075033	P760030075033	B760030075033	60	3.00	7.50	3.3	174	70	1.220
W760060030060	P760060030060	B760060030060	60	6.00	3.00	6.0	87	174	1.110
W760060040050	P760060040050	B760060040050	60	6.00	4.00	5.0	87	131	0.950
W760060060060	P760060060060	B760060060060	60	6.00	6.00	6.0	87	87	1.370
W760060060080	P760060060080	B760060060080	60	6.00	6.00	8.0	87	87	1.920
W760060060100	P760060060100	B760060060100	60	6.00	6.00	10.0	87	87	2.410
W760060060120	P760060060120	B760060060120	60	6.00	6.00	12.0	87	87	3.640
W760060060140	P760060060140	B760060060140	60	6.00	6.00	14.0	87	87	4.290
W760070030070	P760070030070	B760070030070	60	7.00	3.00	7.0	75	174	1.240
W760080030080	P760080030080	B760080030080	60	8.00	3.00	8.0	65	174	1.370
W760080040080	P760080040080	B760080040080	60	8.00	4.00	8.0	65	131	1.430
W760080060100	P760080060100	B760080060100	60	8.00	6.00	10.0	65	87	2.080
W760090030100	P760090030100	B760090030100	60	9.00	3.00	10.0	58	174	1.660
W760100040100	P760100040100	B760100040100	60	10.00	4.00	10.0	52	131	1.690
W765000060040	P765000060040	B765000060040	65	0.00	6.00	4.0	0	87	1.910
W765000080033	P765000080033	B765000080033	65	0.00	8.00	3.3	0	65	2.020
W765000090033	P765000090033	B765000090033	65	0.00	9.00	3.3	0	58	2.120
W765000100033	P765000100033	B765000100033	65	0.00	10.00	3.3	0	52	2.250
W765000120033	P765000120033	B765000120033	65	0.00	12.00	3.3	0	44	2.600
W765000140050	P765000140050	B765000140050	65	0.00	14.00	5.0	0	37	4.550
W765005100070	P765005100070	B765005100070	65	0.50	10.00	7.0	1046	52	4.240
W765010060060	P765010060060	B765010060060	65	1.00	6.00	6.0	523	87	2.410
W765020075033	P765020075033	B765020075033	65	2.00	7.50	3.3	262	70	1.610
W765020080033	P765020080033	B765020080033	65	2.00	8.00	3.3	262	65	1.700
W765020090033	P765020090033	B765020090033	65	2.00	9.00	3.3	262	58	1.820
W765020100033	P765020100033	B765020100033	65	2.00	10.00	3.3	262	52	1.990
W760030040033	P760030040033	B760030040033	65	3.00	4.00	3.3	174	131	1.040
W765030045033	P765030045033	B765030045033	65	3.00	4.50	3.3	174	116	1.110
W765030055033	P765030055033	B765030055033	65	3.00	5.50	3.3	174	95	1.240
W765030060060	P765030060060	B765030060060	65	3.00	6.00	6.0	174	80	2.040
W765030065033	P765030065033	B765030065033	65	3.00	6.50	3.3	174	80	1.370
W765030075033	P765030075033	B765030075033	65	3.00	7.50	3.3	174	70	1.560
W765045055033	P765045055033	B765045055033	65	4.50	5.50	3.3	116	95	1.040
W765060030060	P765060030060	B765060030060	65	6.00	3.00	6.0	87	174	1.210
W765060040050	P765060040050	B765060040050	65	6.00	4.00	5.0	87	131	1.110
W765060060060	P765060060060	B765060060060	65	6.00	6.00	6.0	87	87	1.560
W765060060080	P765060060080	B765060060080	65	6.00	6.00	8.0	87	87	2.050
W765060060100	P765060060100	B765060060100	65	6.00	6.00	10.0	87	87	2.600
W765060060120	P765060060120	B765060060120	65	6.00	6.00	12.0	87	87	4.290
W765060060140	P765060060140	B765060060140	65	6.00	6.00	14.0	87	87	4.940
W765060060160	P765060060160	B765060060160	65	6.00	6.00	16.0	87	87	6.020
W765070030070	P765070030070	B765070030070	65	7.00	3.00	7.0	75	174	1.340
W765080030080	P765080030080	B765080030080	65	8.00	3.00	8.0	65	174	1.470
W765080040080	P765080040080	B765080040080	65	8.00	4.00	8.0	65	131	1.630
W765100040100	P765100040100	B765100040100	65	10.00	4.00	10.0	52	131	1.890
W770020080033	P770020080033	B770020080033	70	2.00	8.00	3.3	262	65	2.330
W770030065033	P770030065033	B770030065033	70	3.00	6.50	3.3	174	80	1.820
W770030075033	P770030075033	B770030075033	70	3.00	7.50	3.3	174	70	2.030
W770060030050	P770060030050	B770060030050	70	6.00	3.00	5.0	87	174	1.090
W770060040050	P770060040050	B770060040050	70	6.00	4.00	5.0	87	131	1.270
W770060060060	P770060060060	B770060060060	70	6.00	6.00	6.0	87	87	1.990
W770080030080	P770080030080	B770080030080	70	8.00	3.00	8.0	65	174	1.630

1.8 Hi-index Lens Blanks

- Refraction index N_d=1.8
- Abbe Value 35
- Density 3.66 g/cm^3
- UV cut-off 340 nm
- White and pink color available
- Transmission for white light ≥ 85% (white), 80% (pink)

USD/Pair

Code		Dia. (mm)	Curve		C. Thick. (mm)	Curve Radius (mm)		Price
White	Pink		CVX(+)	CCV(-)		CVX(+)	CCV(-)	
W860000080033	P860000080033	60	0.00	8.00	3.3	0	65	19.840
W860000100033	P860000100033	60	0.00	10.00	3.3	0	52	22.610
W860000120033	P860000120033	60	0.00	12.00	3.3	0	44	25.630
W860000140033	P860000140033	60	0.00	14.00	3.3	0	37	29.070
W860020070033	P860020070033	60	2.00	7.00	3.3	262	75	15.590
W860020090033	P860020090033	60	2.00	9.00	3.3	262	58	18.250
W865000100033	P865000100033	65	0.00	10.00	3.3	0	52	29.280
W865000120033	P865000120033	65	0.00	12.00	3.3	0	44	34.340
W865000140033	P865000140033	65	0.00	14.00	3.3	0	37	38.900
W865000160033	P865000160033	65	0.00	16.00	3.3	0	33	44.730
W865020040033	P865020040033	65	2.00	4.00	3.3	262	131	14.590
W865020050033	P865020050033	65	2.00	5.00	3.3	262	105	16.300
W865020060033	P865020060033	65	2.00	6.00	3.3	262	87	17.770
W865020070033	P865020070033	65	2.00	7.00	3.3	262	75	19.830
W865020080033	P865020080033	65	2.00	8.00	3.3	262	65	21.680
W865020090033	P865020090033	65	2.00	9.00	3.3	262	58	23.600
W865020100033	P865020100033	65	2.00	10.00	3.3	262	52	25.990

1.9 Hi-index Lens Blanks

- Refraction index N_d=1.9
- Abbe Value 31
- Density 4.10 g/cm^3
- UV cut-off 340 nm
- Transmission for white light ≥ 82%

USD/Pair

Code	Dia. (mm)	Curve		C. Thick. (mm)	Curve Radius (mm)		Price
		CVX(+)	CCV(-)		CVX(+)	CCV(-)	
W960000080033	60	0.00	8.00	3.3	0	65	46.670
W960000100033	60	0.00	10.00	3.3	0	52	52.000
W960000120033	60	0.00	12.00	3.3	0	44	56.000
W960000140033	60	0.00	14.00	3.3	0	37	60.670
W960000160033	60	0.00	16.00	3.3	0	33	66.670
W960020060033	60	2.00	6.00	3.3	262	87	31.330
W960020080033	60	2.00	8.00	3.3	262	65	38.000
W965000100033	65	0.00	10.00	3.3	0	52	68.000
W965000120033	65	0.00	12.00	3.3	0	44	74.670
W965000140033	65	0.00	14.00	3.3	0	37	81.330
W965020050033	65	2.00	5.00	3.3	262	105	36.000
W965020060033	65	2.00	6.00	3.3	262	87	40.000
W965020070033	65	2.00	7.00	3.3	262	75	45.330
W965020080033	65	2.00	8.00	3.3	262	65	51.330
W965020090033	65	2.00	9.00	3.3	262	58	56.670
W965020100033	65	2.00	10.00	3.3	262	52	63.330

Photochromic Grey Lens Blanks

- Refraction index N_d=1.523
- Abbe value 56
- Density 2.41 g/cm^3
- Compressive stress birefringence ⩽ 100 nm/cm
- Half-waxing time ⩽ 2 minutes
- Initial transmittance 90%
- Darkening transmittance after 5 minutes 15-50%

USD/Pair

Code	Dia. (mm)	Curve		C. Thick. (mm)	Curve Radius (mm)		Price
		CVX(+)	CCV(-)		CVX(+)	CCV(-)	
PG60010060030	60	1.00	6.00	3.0	523	87	1.390
PG60010060040	60	1.00	6.00	4.0	523	87	1.620
PG60020060030	60	2.00	6.00	3.0	262	87	1.250
PG60020060040	60	2.00	6.00	4.0	262	87	1.490
PG60025060030	60	2.50	6.00	3.0	209	87	1.190
PG60030060030	60	3.00	6.00	3.0	174	87	1.120
PG60030060040	60	3.00	6.00	4.0	174	87	1.360
PG60035060030	60	3.50	6.00	3.0	149	87	1.060
PG60040060030	60	4.00	6.00	3.0	131	87	0.990
PG60040060040	60	4.00	6.00	4.0	131	87	1.230
PG60045060030	60	4.50	6.00	3.0	116	87	0.930
PG60050060030	60	5.00	6.00	3.0	105	87	0.860
PG60050060040	60	5.00	6.00	4.0	105	87	1.100
PG60055060030	60	5.50	6.00	3.0	95	87	0.800
PG60060060026	60	6.00	6.00	2.6	87	87	0.620
PG60060060028	60	6.00	6.00	2.8	87	87	0.660
PG60060060030	60	6.00	6.00	3.0	87	87	0.710
PG60060060035	60	6.00	6.00	3.5	87	87	0.830
PG60060060040	60	6.00	6.00	4.0	87	87	0.950
PG60060060050	60	6.00	6.00	5.0	87	87	1.170
PG60060060060	60	6.00	6.00	6.0	87	87	1.420
PG60060060070	60	6.00	6.00	7.0	87	87	1.660
PG60060060080	60	6.00	6.00	8.0	87	87	1.900
PG60060060090	60	6.00	6.00	9.0	87	87	2.130
PG60060060100	60	6.00	6.00	10.0	87	87	2.370
PG65010060030	65	1.00	6.00	3.0	523	87	1.570
PG65010060040	65	1.00	6.00	4.0	523	87	1.840
PG65020060030	65	2.00	6.00	3.0	262	87	1.420
PG65020060040	65	2.00	6.00	4.0	262	87	1.700
PG65025060030	65	2.50	6.00	3.0	209	87	1.350
PG65030060030	65	3.00	6.00	3.0	174	87	1.280
PG65030060040	65	3.00	6.00	4.0	174	87	1.550
PG65035060030	65	3.50	6.00	3.0	149	87	1.210
PG65040060030	65	4.00	6.00	3.0	131	87	1.140
PG65040060040	65	4.00	6.00	4.0	131	87	1.410
PG65045060030	65	4.50	6.00	3.0	116	87	1.060
PG65050060030	65	5.00	6.00	3.0	105	87	0.990
PG65050060040	65	5.00	6.00	4.0	105	87	1.260

Code	Dia. (mm)	Curve		C. Thick. (mm)	Curve Radius (mm)		Price
		CVX(+)	CCV(-)		CVX(+)	CCV(-)	
PG65055060030	65	5.50	6.00	3.0	95	87	0.920
PG65060060026	65	6.00	6.00	2.6	87	87	0.710
PG65060060028	65	6.00	6.00	2.8	87	87	0.760
PG65060060030	65	6.00	6.00	3.0	87	87	0.820
PG65060060035	65	6.00	6.00	3.5	87	87	0.960
PG65060060040	65	6.00	6.00	4.0	87	87	1.090
PG65060060050	65	6.00	6.00	5.0	87	87	1.370
PG65060060060	65	6.00	6.00	6.0	87	87	1.640
PG65060060070	65	6.00	6.00	7.0	87	87	1.910
PG65060060080	65	6.00	6.00	8.0	87	87	2.180
PG65060060090	65	6.00	6.00	9.0	87	87	2.460
PG65060060100	65	6.00	6.00	10.0	87	87	2.730
PG70010060030	70	1.00	6.00	3.0	523	87	1.760
PG70010060040	70	1.00	6.00	4.0	523	87	2.080
PG70020060030	70	2.00	6.00	3.0	262	87	1.600
PG70020060040	70	2.00	6.00	4.0	262	87	1.910
PG70025060030	70	2.50	6.00	3.0	209	87	1.530
PG70030060030	70	3.00	6.00	3.0	174	87	1.450
PG70030060040	70	3.00	6.00	4.0	174	87	1.760
PG70035060030	70	3.50	6.00	3.0	149	87	1.370
PG70040060030	70	4.00	6.00	3.0	131	87	1.290
PG70040060040	70	4.00	6.00	4.0	131	87	1.600
PG70045060030	70	4.50	6.00	3.0	116	87	1.210
PG70050060030	70	5.00	6.00	3.0	105	87	1.130
PG70050060040	70	5.00	6.00	4.0	105	87	1.350
PG70055060030	70	5.50	6.00	3.0	95	87	1.060
PG70060060026	70	6.00	6.00	2.6	87	87	0.810
PG70060060028	70	6.00	6.00	2.8	87	87	0.870
PG70060060030	70	6.00	6.00	3.0	87	87	0.930
PG70060060035	70	6.00	6.00	3.5	87	87	1.090
PG70060060040	70	6.00	6.00	4.0	87	87	1.244
PG70060060050	70	6.00	6.00	5.0	87	87	1.560
PG70060060060	70	6.00	6.00	6.0	87	87	1.870
PG70060060070	70	6.00	6.00	7.0	87	87	2.170
PG70060060080	70	6.00	6.00	8.0	87	87	2.490
PG70060060090	70	6.00	6.00	9.0	87	87	2.800
PG70060060100	70	6.00	6.00	10.0	87	87	3.110

Photochromic Brown Lens Blanks

- Refraction index N_d=1.523
- Abbe value 56
- Density 2.41 g/cm^3
- Compressive stress birefringence ⩽ 100 nm/cm
- Half-waxing time ⩽ 2 minutes
- Initial transmittance 86%
- Darkening transmittance after 5 minutes 15-50%

USD/Pair

Code	Dia. (mm)	Curve		C. Thick. (mm)	Curve Radius (mm)		Price
		CVX(+)	CCV(-)		CVX(+)	CCV(-)	
PB60010060030	60	1.00	6.00	3.0	523	87	1.610
PB60010060040	60	1.00	6.00	4.0	523	87	1.730
PB60020060030	60	2.00	6.00	3.0	262	87	1.470
PB60020060040	60	2.00	6.00	4.0	262	87	1.770
PB60025060030	60	2.50	6.00	3.0	209	87	1.400
PB60030060030	60	3.00	6.00	3.0	174	87	1.330
PB60030060040	60	3.00	6.00	4.0	174	87	1.630
PB60035060030	60	3.50	6.00	3.0	149	87	1.260
PB60040060030	60	4.00	6.00	3.0	131	87	1.190
PB60040060040	60	4.00	6.00	4.0	131	87	1.490
PB60045060030	60	4.50	6.00	3.0	116	87	1.120
PB60050060030	60	5.00	6.00	3.0	105	87	1.050
PB60050060040	60	5.00	6.00	4.0	105	87	1.350
PB60055060030	60	5.50	6.00	3.0	95	87	0.980
PB60060060026	60	6.00	6.00	2.6	87	87	0.780
PB60060060028	60	6.00	6.00	2.8	87	87	0.830
PB60060060030	60	6.00	6.00	3.0	87	87	0.890
PB60060060035	60	6.00	6.00	3.5	87	87	1.040
PB60060060040	60	6.00	6.00	4.0	87	87	1.190
PB60060060050	60	6.00	6.00	5.0	87	87	1.490
PB60060060060	60	6.00	6.00	6.0	87	87	1.790
PB60060060070	60	6.00	6.00	7.0	87	87	2.090
PB60060060080	60	6.00	6.00	8.0	87	87	2.390
PB60060060090	60	6.00	6.00	9.0	87	87	2.680
PB60060060100	60	6.00	6.00	10.0	87	87	2.980
PB65010060030	65	1.00	6.00	3.0	523	87	1.810
PB65010060040	65	1.00	6.00	4.0	523	87	2.150
PB65020060030	65	2.00	6.00	3.0	262	87	1.660
PB65020060040	65	2.00	6.00	4.0	262	87	2.000
PB65025060030	65	2.50	6.00	3.0	209	87	1.590
PB65030060030	65	3.00	6.00	3.0	174	87	1.510
PB65030060040	65	3.00	6.00	4.0	174	87	1.850
PB65035060030	65	3.50	6.00	3.0	149	87	1.430
PB65040060030	65	4.00	6.00	3.0	131	87	1.360
PB65040060040	65	4.00	6.00	4.0	131	87	1.700
PB65045060030	65	4.50	6.00	3.0	116	87	1.280
PB65050060030	65	5.00	6.00	3.0	105	87	1.210
PB65050060040	65	5.00	6.00	4.0	105	87	1.540

Code	Dia. (mm)	Curve		C. Thick. (mm)	Curve Radius (mm)		Price
		CVX(+)	CCV(-)		CVX(+)	CCV(-)	
PB65055060030	65	5.50	6.00	3.0	95	87	1.130
PB65060060026	65	6.00	6.00	2.6	87	87	0.890
PB65060060028	65	6.00	6.00	2.8	87	87	0.960
PB65060060030	65	6.00	6.00	3.0	87	87	1.020
PB65060060035	65	6.00	6.00	3.5	87	87	1.190
PB65060060040	65	6.00	6.00	4.0	87	87	1.370
PB65060060050	65	6.00	6.00	5.0	87	87	1.710
PB65060060060	65	6.00	6.00	6.0	87	87	2.050
PB65060060070	65	6.00	6.00	7.0	87	87	2.390
PB65060060080	65	6.00	6.00	8.0	87	87	2.730
PB65060060090	65	6.00	6.00	9.0	87	87	3.070
PB65060060100	65	6.00	6.00	10.0	87	87	3.410
PB70010060030	70	1.00	6.00	3.0	523	87	2.180
PB70010060040	70	1.00	6.00	4.0	523	87	2.610
PB70020060030	70	2.00	6.00	3.0	262	87	2.020
PB70020060040	70	2.00	6.00	4.0	262	87	2.440
PB70025060030	70	2.50	6.00	3.0	209	87	1.930
PB70030060030	70	3.00	6.00	3.0	174	87	1.850
PB70030060040	70	3.00	6.00	4.0	174	87	2.280
PB70035060030	70	3.50	6.00	3.0	149	87	1.770
PB70040060030	70	4.00	6.00	3.0	131	87	1.690
PB70040060040	70	4.00	6.00	4.0	131	87	2.120
PB70045060030	70	4.50	6.00	3.0	116	87	1.600
PB70050060030	70	5.00	6.00	3.0	105	87	1.520
PB70050060040	70	5.00	6.00	4.0	105	87	1.950
PB70055060030	70	5.50	6.00	3.0	95	87	1.440
PB70060060026	70	6.00	6.00	2.6	87	87	1.110
PB70060060028	70	6.00	6.00	2.8	87	87	1.200
PB70060060030	70	6.00	6.00	3.0	87	87	1.290
PB70060060035	70	6.00	6.00	3.5	87	87	1.500
PB70060060040	70	6.00	6.00	4.0	87	87	1.720
PB70060060050	70	6.00	6.00	5.0	87	87	2.150
PB70060060060	70	6.00	6.00	6.0	87	87	2.570
PB70060060070	70	6.00	6.00	7.0	87	87	3.000
PB70060060080	70	6.00	6.00	8.0	87	87	3.430
PB70060060090	70	6.00	6.00	9.0	87	87	3.860
PB70060060100	70	6.00	6.00	10.0	87	87	4.290

Mold Glass

- Refraction index N_d=1.523
- Abbe value 58
- Density 2.53 g/cm^3
- Transmission rate of white light ⩾ 91%
- UV cut-off 290 nm
- Linear thermal expansion coefficient (0-300°C) 90.8 x 10^{-7}/°C
- Compressive stress birefringence ⩽ 70 nm/cm
- Annealing Point 520°C

USD/Piece

Curve		Curve Radius (mm)		C. Thick.	Dia65mm		Dia70mm		Dia71mm		Dia74mm		Dia75mm	
CVX(+)	CCV(-)	CVX(+)	CCV(-)	(mm)	P.T.[1]	M.T.[2]	P.T.[1]	M.T.[2]	P.T.[1]	M.T.[2]	P.T.[1]	M.T.[2]	P.T.[1]	M.T.[2]
0.00	0.00	0	0	4.5	0.190	0.190	0.220	0.220	0.240	0.240	0.260	0.260	0.270	0.270
0.00	0.00	0	0	5.0	0.210	0.210	0.240	0.240	0.270	0.270	0.290	0.290	0.300	0.300
0.00	0.00	0	0	5.5	0.230	0.230	0.280	0.280	0.310	0.310	0.330	0.330	0.340	0.340
1.00	1.00	523	523	4.5	0.190	0.190	0.220	0.220	0.240	0.240	0.260	0.260	0.270	0.270
1.00	1.00	523	523	5.0	0.210	0.210	0.240	0.240	0.270	0.270	0.290	0.290	0.300	0.300
1.00	1.00	523	523	5.5	0.230	0.230	0.280	0.280	0.310	0.310	0.330	0.330	0.340	0.340
1.00	1.00	523	523	6.0	0.260	0.260	0.320	0.320	0.350	0.350	0.370	0.370	0.370	0.370
1.00	1.00	523	523	7.0	0.310	0.310	0.360	0.360	0.420	0.420	0.420	0.420	0.430	0.430
1.00	1.00	523	523	8.0	0.350	0.350	0.400	0.400	0.450	0.450	0.460	0.460	0.470	0.470
1.00	1.00	523	523	9.0	0.380	0.380	0.450	0.450	0.480	0.480	0.500	0.500	0.510	0.510
1.00	1.00	523	523	10.0	0.420	0.420	0.500	0.500	0.510	0.510	0.530	0.530	0.540	0.540
2.00	2.00	262	262	4.5	0.190	0.190	0.220	0.220	0.240	0.240	0.260	0.260	0.270	0.270
2.00	2.00	262	262	5.0	0.210	0.210	0.240	0.240	0.270	0.270	0.290	0.290	0.300	0.300
2.00	2.00	262	262	5.5	0.230	0.230	0.280	0.280	0.310	0.310	0.330	0.330	0.340	0.340
2.00	2.00	262	262	6.0	0.260	0.260	0.320	0.320	0.350	0.350	0.370	0.370	0.370	0.370
2.00	2.00	262	262	7.0	0.310	0.310	0.360	0.360	0.400	0.400	0.420	0.420	0.430	0.430
2.00	2.00	262	262	8.0	0.350	0.350	0.400	0.400	0.450	0.450	0.460	0.460	0.470	0.470
2.00	2.00	262	262	9.0	0.380	0.380	0.450	0.450	0.480	0.480	0.500	0.500	0.510	0.510
2.00	2.00	262	262	10.0	0.420	0.420	0.500	0.500	0.510	0.510	0.530	0.530	0.540	0.540
3.00	3.00	174	174	4.5	0.190	0.190	0.220	0.220	0.240	0.240	0.260	0.260	0.270	0.270
3.00	3.00	174	174	5.0	0.210	0.210	0.240	0.240	0.270	0.270	0.290	0.290	0.300	0.300
3.00	3.00	174	174	5.5	0.230	0.230	0.280	0.280	0.310	0.310	0.330	0.330	0.340	0.340
3.00	3.00	174	174	6.0	0.260	0.260	0.320	0.320	0.350	0.350	0.370	0.370	0.370	0.370
3.00	3.00	174	174	7.0	0.310	0.310	0.360	0.360	0.400	0.400	0.420	0.420	0.430	0.430
3.00	3.00	174	174	8.0	0.350	0.350	0.400	0.400	0.450	0.450	0.460	0.460	0.470	0.470
3.00	3.00	174	174	9.0	0.380	0.380	0.450	0.450	0.480	0.480	0.500	0.500	0.510	0.510
3.00	3.00	174	174	10.0	0.420	0.420	0.500	0.500	0.510	0.510	0.530	0.530	0.540	0.540
4.00	4.00	131	131	4.5	0.190	0.190	0.220	0.220	0.240	0.240	0.260	0.260	0.270	0.270
4.00	4.00	131	131	5.0	0.210	0.210	0.240	0.240	0.270	0.270	0.290	0.290	0.300	0.300
4.00	4.00	131	131	5.5	0.230	0.230	0.280	0.280	0.310	0.310	0.330	0.330	0.340	0.340
4.00	4.00	131	131	6.0	0.260	0.260	0.320	0.320	0.350	0.350	0.370	0.370	0.370	0.370

Remark 1 P. T. means plus tolerance on diameter, allowed tolerance 0 to 0.2mm.

Remark 2 M. T. means minus tolerance on diameter, allowed tolerance - 0.2mm to 0mm.

USD/Piece

Curve		Curve Radius (mm)		C. Thick.	Dia76mm		Dia78mm		Dia80mm		Dia84mm	
CVX(+)	CCV(-)	CVX(+)	CCV(-)	(mm)	P.T.[1]	M.T.[2]	P.T.[1]	M.T.[2]	P.T.[1]	M.T.[2]	P.T.[1]	M.T.[2]
0.00	0.00	0	0	4.5	0.310	0.310	0.340	0.340	0.560	0.560	0.750	0.750
0.00	0.00	0	0	5.0	0.330	0.330	0.370	0.370	0.600	0.600	0.870	0.870
0.00	0.00	0	0	5.5	0.370	0.370	0.400	0.400	0.630	0.630	0.900	0.900
1.00	1.00	523	523	4.5	0.310	0.310	0.340	0.340	0.560	0.560	0.750	0.750
1.00	1.00	523	523	5.0	0.330	0.330	0.370	0.370	0.600	0.600	0.870	0.870
1.00	1.00	523	523	5.5	0.370	0.370	0.400	0.400	0.630	0.630	0.900	0.900
1.00	1.00	523	523	6.0	0.400	0.400	0.440	0.440	0.660	0.660	0.930	0.930
1.00	1.00	523	523	7.0	0.460	0.460	0.510	0.510	0.750	0.750	0.930	0.930
1.00	1.00	523	523	8.0	0.510	0.510	0.560	0.560	0.840	0.840	1.110	1.110
1.00	1.00	523	523	9.0	0.540	0.540	0.620	0.620	0.930	0.930	1.120	1.120
1.00	1.00	523	523	10.0	0.570	0.570	0.670	0.670	1.030	1.030	1.300	1.300
2.00	2.00	262	262	4.5	0.310	0.310	0.340	0.340	0.560	0.560	0.750	0.750
2.00	2.00	262	262	5.0	0.330	0.330	0.370	0.370	0.600	0.600	0.870	0.870
2.00	2.00	262	262	5.5	0.370	0.370	0.400	0.400	0.630	0.630	0.900	0.900
2.00	2.00	262	262	6.0	0.400	0.400	0.440	0.440	0.660	0.660	0.930	0.930
2.00	2.00	262	262	7.0	0.460	0.460	0.510	0.510	0.750	0.750	0.930	0.930
2.00	2.00	262	262	8.0	0.510	0.510	0.560	0.560	0.840	0.840	1.110	1.110
2.00	2.00	262	262	9.0	0.540	0.540	0.620	0.620	0.930	0.930	1.120	1.120
2.00	2.00	262	262	10.0	0.570	0.570	0.670	0.670	1.030	1.030	1.300	1.300
3.00	3.00	174	174	4.5	0.310	0.310	0.340	0.340	0.560	0.560	0.750	0.750
3.00	3.00	174	174	5.0	0.330	0.330	0.370	0.370	0.600	0.600	0.870	0.870
3.00	3.00	174	174	5.5	0.370	0.370	0.400	0.400	0.630	0.630	0.900	0.900
3.00	3.00	174	174	6.0	0.400	0.400	0.440	0.440	0.660	0.660	0.930	0.930
3.00	3.00	174	174	7.0	0.460	0.460	0.510	0.510	0.750	0.750	0.930	0.930
3.00	3.00	174	174	8.0	0.510	0.510	0.560	0.560	0.840	0.840	1.110	1.110
3.00	3.00	174	174	9.0	0.540	0.540	0.620	0.620	0.930	0.930	1.120	1.120
3.00	3.00	174	174	10.0	0.570	0.570	0.670	0.670	1.030	1.030	1.300	1.300
4.00	4.00	131	131	4.5	0.310	0.310	0.340	0.340	0.560	0.560	0.750	0.750
4.00	4.00	131	131	5.0	0.330	0.330	0.370	0.370	0.600	0.600	0.870	0.870
4.00	4.00	131	131	5.5	0.370	0.370	0.400	0.400	0.630	0.630	0.900	0.900
4.00	4.00	131	131	6.0	0.400	0.400	0.440	0.440	0.660	0.660	0.930	0.930

Remark 1 P. T. means plus tolerance on diameter, allowed tolerance 0 to 0.2mm.

Remark 2 M. T. means minus tolerance on diameter, allowed tolerance - 0.2mm to 0mm.

USD/Piece

Curve		Curve Radius (mm)		C. Thick.	Dia65mm		Dia70mm		Dia71mm		Dia74mm		Dia75mm	
CVX(+)	CCV(-)	CVX(+)	CCV(-)	(mm)	P.T.[1]	M.T.[2]	P.T.[1]	M.T.[2]	P.T.[1]	M.T.[2]	P.T.[1]	M.T.[2]	P.T.[1]	M.T.[2]
4.00	4.00	131	131	7.0	0.310	0.310	0.360	0.360	0.400	0.400	0.420	0.420	0.430	0.430
4.00	4.00	131	131	8.0	0.350	0.350	0.400	0.400	0.450	0.450	0.460	0.460	0.470	0.470
4.00	4.00	131	131	9.0	0.380	0.380	0.450	0.450	0.480	0.480	0.500	0.500	0.510	0.510
4.00	4.00	131	131	10.0	0.420	0.420	0.500	0.500	0.510	0.510	0.530	0.530	0.540	0.540
4.00	5.00	131	105	6.0	0.310	0.310	0.360	0.360	0.400	0.400	0.420	0.420	0.430	0.430
5.00	5.00	105	105	4.5	0.190	0.190	0.220	0.220	0.240	0.240	0.260	0.260	0.270	0.270
5.00	5.00	105	105	5.0	0.210	0.210	0.240	0.240	0.270	0.270	0.290	0.290	0.300	0.300
5.00	5.00	105	105	5.5	0.230	0.230	0.280	0.280	0.310	0.310	0.330	0.330	0.340	0.340
5.00	5.00	105	105	6.0	0.260	0.260	0.320	0.320	0.350	0.350	0.370	0.370	0.370	0.370
5.00	5.00	105	105	7.0	0.310	0.310	0.360	0.360	0.400	0.400	0.420	0.420	0.430	0.430
5.00	5.00	105	105	8.0	0.350	0.350	0.400	0.400	0.450	0.450	0.460	0.460	0.470	0.470
5.00	5.00	105	105	9.0	0.380	0.380	0.450	0.450	0.480	0.480	0.500	0.500	0.510	0.510
5.00	5.00	105	105	10.0	0.420	0.420	0.500	0.500	0.510	0.510	0.530	0.530	0.540	0.540
5.00	6.00	105	87	6.0	0.310	0.310	0.360	0.360	0.400	0.400	0.420	0.420	0.430	0.430
5.00	7.00	105	75	6.0	0.320	0.320	0.370	0.370	0.440	0.440	0.440	0.440	0.450	0.450
5.00	9.00	105	58	6.0	0.370	0.370	0.430	0.430	0.460	0.460	0.470	0.470	0.480	0.480
6.00	6.00	87	87	6.0	0.260	0.260	0.320	0.320	0.350	0.350	0.370	0.370	0.370	0.370
6.00	6.00	87	87	7.0	0.310	0.310	0.360	0.360	0.400	0.400	0.420	0.420	0.430	0.430
6.00	6.00	87	87	8.0	0.350	0.350	0.400	0.400	0.450	0.450	0.460	0.460	0.470	0.470
6.00	6.00	87	87	9.0	0.380	0.380	0.450	0.450	0.480	0.480	0.500	0.500	0.510	0.510
6.00	6.00	87	87	10.0	0.420	0.420	0.500	0.500	0.510	0.510	0.530	0.530	0.540	0.540
6.00	7.00	87	75	6.0	0.310	0.310	0.360	0.360	0.400	0.400	0.420	0.420	0.430	0.430
6.00	8.00	87	65	6.0	0.320	0.320	0.370	0.370	0.440	0.440	0.440	0.440	0.450	0.450
6.00	10.00	87	52	6.0	0.370	0.370	0.430	0.430	0.460	0.460	0.470	0.470	0.480	0.480
7.00	7.00	75	75	6.0	0.260	0.260	0.320	0.320	0.350	0.350	0.370	0.370	0.370	0.370
7.00	7.00	75	75	7.0	0.310	0.310	0.360	0.360	0.400	0.400	0.420	0.420	0.430	0.430
7.00	7.00	75	75	8.0	0.350	0.350	0.400	0.400	0.450	0.450	0.460	0.460	0.470	0.470
7.00	7.00	75	75	9.0	0.380	0.380	0.450	0.450	0.480	0.480	0.500	0.500	0.510	0.510
7.00	7.00	75	75	10.0	0.420	0.420	0.500	0.500	0.510	0.510	0.530	0.530	0.540	0.540
7.00	9.00	75	58	6.0	0.320	0.320	0.370	0.370	0.440	0.440	0.440	0.440	0.450	0.450
8.00	8.00	65	65	6.0	0.260	0.260	0.320	0.320	0.350	0.350	0.370	0.370	0.370	0.370
8.00	8.00	65	65	7.0	0.310	0.310	0.360	0.360	0.400	0.400	0.420	0.420	0.430	0.430
8.00	8.00	65	65	8.0	0.350	0.350	0.400	0.400	0.450	0.450	0.460	0.460	0.470	0.470
8.00	8.00	65	65	9.0	0.380	0.380	0.450	0.450	0.480	0.480	0.500	0.500	0.510	0.510
8.00	8.00	65	65	10.0	0.420	0.420	0.500	0.500	0.510	0.510	0.530	0.530	0.540	0.540

Remark 1 P. T. means plus tolerance on diameter, allowed tolerance 0 to 0.2mm.

Remark 2 M. T. means minus tolerance on diameter, allowed tolerance - 0.2mm to 0mm.

USD/Piece

Curve		Curve Radius (mm)		C. Thick.	Dia76mm		Dia78mm		Dia80mm		Dia84mm	
CVX(+)	CCV(-)	CVX(+)	CCV(-)	(mm)	P.T.[1]	M.T.[2]	P.T.[1]	M.T.[2]	P.T.[1]	M.T.[2]	P.T.[1]	M.T.[2]
4.00	4.00	131	131	7.0	0.460	0.460	0.510	0.510	0.750	0.750	0.930	0.930
4.00	4.00	131	131	8.0	0.510	0.510	0.560	0.560	0.840	0.840	1.110	1.110
4.00	4.00	131	131	9.0	0.540	0.540	0.620	0.620	0.930	0.930	1.120	1.120
4.00	4.00	131	131	10.0	0.570	0.570	0.670	0.670	1.030	1.030	1.300	1.300
4.00	5.00	131	105	6.0	0.460	0.460	0.510	0.510	0.740	0.740	1.310	1.310
5.00	5.00	105	105	4.5	0.310	0.310	0.340	0.340	0.560	0.560	0.750	0.750
5.00	5.00	105	105	5.0	0.330	0.330	0.370	0.370	0.600	0.600	0.870	0.870
5.00	5.00	105	105	5.5	0.370	0.370	0.400	0.400	0.630	0.630	0.900	0.900
5.00	5.00	105	105	6.0	0.400	0.400	0.440	0.440	0.660	0.660	0.930	0.930
5.00	5.00	105	105	7.0	0.460	0.460	0.510	0.510	0.750	0.750	0.930	0.930
5.00	5.00	105	105	8.0	0.510	0.510	0.560	0.560	0.840	0.840	1.110	1.110
5.00	5.00	105	105	9.0	0.540	0.540	0.620	0.620	0.930	0.930	1.120	1.120
5.00	5.00	105	105	10.0	0.570	0.570	0.670	0.670	1.030	1.030	1.300	1.300
5.00	6.00	105	87	6.0	0.460	0.460	0.510	0.510	0.740	0.740	1.310	1.310
5.00	7.00	105	75	6.0	0.490	0.490	0.530	0.530	0.770	0.770	1.430	1.430
5.00	9.00	105	58	6.0	0.510	0.510	0.570	0.570	0.790	0.790	1.470	1.470
6.00	6.00	87	87	6.0	0.400	0.400	0.440	0.440	0.660	0.660	0.930	0.930
6.00	6.00	87	87	7.0	0.460	0.460	0.510	0.510	0.750	0.750	0.930	0.930
6.00	6.00	87	87	8.0	0.510	0.510	0.560	0.560	0.840	0.840	1.110	1.110
6.00	6.00	87	87	9.0	0.540	0.540	0.620	0.620	0.930	0.930	1.120	1.120
6.00	6.00	87	87	10.0	0.570	0.570	0.670	0.670	1.030	1.030	1.300	1.300
6.00	7.00	87	75	6.0	0.460	0.460	0.510	0.510	0.740	0.740	1.310	1.310
6.00	8.00	87	65	6.0	0.490	0.490	0.530	0.530	0.770	0.770	1.430	1.430
6.00	10.00	87	52	6.0	0.510	0.510	0.570	0.570	0.790	0.790	1.470	1.470
7.00	7.00	75	75	6.0	0.400	0.400	0.440	0.440	0.660	0.660	0.930	0.930
7.00	7.00	75	75	7.0	0.460	0.460	0.510	0.510	0.750	0.750	0.930	0.930
7.00	7.00	75	75	8.0	0.510	0.510	0.560	0.560	0.840	0.840	1.110	1.110
7.00	7.00	75	75	9.0	0.540	0.540	0.620	0.620	0.930	0.930	1.120	1.120
7.00	7.00	75	75	10.0	0.570	0.570	0.670	0.670	1.030	1.030	1.300	1.300
7.00	9.00	75	58	6.0	0.490	0.490	0.530	0.530	0.770	0.770	1.430	1.430
8.00	8.00	65	65	6.0	0.400	0.400	0.440	0.440	0.660	0.660	0.930	0.930
8.00	8.00	65	65	7.0	0.460	0.460	0.510	0.510	0.750	0.750	0.930	0.930
8.00	8.00	65	65	8.0	0.510	0.510	0.560	0.560	0.840	0.840	1.110	1.110
8.00	8.00	65	65	9.0	0.540	0.540	0.620	0.620	0.930	0.930	1.120	1.120
8.00	8.00	65	65	10.0	0.570	0.570	0.670	0.670	1.030	1.030	1.300	1.300

Remark 1 P. T. means plus tolerance on diameter, allowed tolerance 0 to 0.2mm.

Remark 2 M. T. means minus tolerance on diameter, allowed tolerance - 0.2mm to 0mm.

Micro Fiber Cleaning Cloth



TÜV CE AEO

ISO9001 ISO14001 OHSAS18001

General Conditions

(1) Micro fiber cleaning cloth is used for cleaning all kinds of lenses, glass, computer screens, CDs, jewelry, watch, music instruments, and lacquerware, etc.

(2) The quality management system of Y&S is ISO9001 (2015) and GB/T19001-2016 certified. The environmental management system of Y&S is ISO14001 (2015) and GB/T24001-2016 certified. The occupational health and safety management system of Y&S is OHSAS18001 (2007) and GB/T28001-2011 certified.

(3) All prices of micro fiber cleaning cloth offered in this Purchase Guide are in US Dollars per piece on FCA/FOB Shanghai, China basis, other delivery terms are considerable. Discounts are applicable for large quantity orders.

(4) If a transaction is made on CIF or CIP basis, insurance will be arranged by Y&S for 110% of invoice value covering all risks, provided no other requirements from the customer.

(5) Minimum quantity of each material and each regular color in each shipment is 1,000 pieces, the total quantity of each shipment with regular colors should be not less than 5,000 pieces. The minimum quantity of ordering each special color is 50,000 pieces.

(6) Customers are welcome to send their very own printing design to Y&S by CD, DVD, or e-mail, Y&S will make the necessary artwork to improve or complete the design free of charge. The files can be edited under a personal computer (PC system) with Macromedia Freehand 10, Adobe InDesign CS6, Adobe Illustrator CS6, or Corel Draw X6, the resolution should be not less than 300 dpi. We will not accept any files created or edited under the Mac system or any other Apple products. Provided the customer is not familiar with the above software, they can submit designs, logo, graphics, and company information, Y&S will make necessary artwork free of charge. Any revised design will be sent to the customer in the graphics format through e-mail for their approval before printing.

(7) Slight differences in color between materials/products and printed demo in this guide are allowed.

(8) Micro fiber cleaning cloth is cleared by Chinese customs under H.S. code 6307.10. If necessary, the H.S. code of the importing country can be shown in shipping documents according to the customer's requirement.

(9) The following payment terms are accepted by Y&S:

- L/C: By irrevocable L/C at sight, provided the covering L/C being received by Y&S on time and remaining valid for negotiation in China until the 21st day after shipment. L/C should be in English and show the full contact information of Y&S.
- T/T: 30% of the total transaction value to be paid by T/T while confirming the order; balance payment to be paid by T/T before shipment.

(10) Goods are of China origin. Commercial Invoices, Packing Lists, and Bill of Lading or Air Waybill will be provided by Y&S under each shipment. An Insurance Policy or Insurance Certificate will also be submitted when the transaction is made on CIF or CIP basis. One of the following Certificate of Origin can be submitted upon the customer's request:

- Certificate of Origin approved by CCPIT - China Council for the Promotion of International Trade (China Chamber of International Commerce)
- Certificate of Origin (Asia-Pacific Trade Agreement) approved by CCPIT - China Council for the Promotion of International Trade (China Chamber of International Commerce)
- Certificate of Origin (Form for China-Peru FTA) approved by CCPIT - China Council for the Promotion of International Trade (China Chamber of International Commerce)
- Certificate of Origin (GSP Form-A) approved by China Entry-Exit Inspection and Quarantine Bureau (CIQ)
- Certificate of Origin (Form F for China-Chile FTA) approved by China Entry-Exit Inspection and Quarantine Bureau (CIQ)

If any other documents are required, the customer needs to inform Y&S when confirming the order. Provided no other notice, all documents will be issued in the name of the customer's company.

(11) Micro fiber cleaning cloth need to be stored in a cool, dry, ventilated condition and they must avoid direct sunlight.

(12) Y&S is entitled to charge a storage fee and other relevant fees if the customer doesn't pick up goods within 30 days after the goods are ready.

(13) Y&S keeps the right to adjust prices, technical data, and conditions without prior notice. Adjusted prices, technical data, and conditions can be downloaded from Y&S's website www.ystj.com.

		K5230		K8175	
Materials		80% polyester, 20% nylon, 230 g/sqm, knitted fabric.		100% polyester, 175 g/sqm, knitted fabric.	
	Fine	Excellent		Good	
	Soft	Excellent		Good	
	Water Absorption	Excellent		Good	
Features	Oil Absorption	Excellent		Normal	
	Dust Elimination	Excellent		Normal	
	Brushing	2 sides		2 sides	
	Elasticity	Low		High	
	Luster	No		Low	
Regular Colors		Grey, Purple, White, Black, Blue, Pink, Green, Orange		White	
Available Edging Process		Saw Cut, Straight Cut, Round Cut, Flower Edge			
Regular Package		100 pieces per bag		100 pieces per bag	
Regular Sizes		150x130mm (6x5")	180x150mm (7x6")	150x130mm (6x5")	180x150mm (7x6")
Price		USD0.094/Piece	USD0.129/Piece	USD0.065/Piece	USD0.086/Piece
Extra fee of Screen Print (Limited Size)		USD0.020/piece/color/side		USD0.020/piece/color/side	
Extra fee of Transfer Print (Full Size)		USD0.073/piece/side		Not suggested	



Transfer Print



Screen Print Gold

For more micro fiber cleaning cloth and optical accessories, please visit http://www.ystj.com/optical/oa_0.htm or contact info@ystj.com.

-2.00 / -1.00

215010010202002010

Patent No. 2015200764602

Tired of testing lens power again and again in labs, warehouses, and shops?

Go for the patented EASY lenses! Lens power, barcode, QR code and descriptions can be printed on the surface, and will be removed easily during eyewear assembly.

EASY

Efficient, Accurate, Saving, Yearning

ISO9001 CE **TÜV** FDA